VECTORWORKS EDUCATIONAL VERSION

SHEET SCHEDULE:

1 - COVER SHEET
2 - GROUND PLAN
3 - SR CENTER LINE SECTION
4 - SL CENTER LINE SECTION
5 - OUTER FALSE PROSCENIUM
6 - BRIDGE UNIT PLOT
7 - BRIDGE PLATFORM - SL
8 - MOVEABLE WALL UNIT
9 - SPIRAL STAIRCASE
10 - BRIDGE PLATFORM - CENTER
11 - INNER FALSE PROSCENIUM
12 - INNER FALSE PRO - CURTAIN
13 - SR PLATFORM
14 - SR PLATFORM DOOR
15 - SR PLATFORM EGRESS
16 - BRIDGE UNIT RAILING PLOT
17 - SR PLATFORM & BRIDGE RAILINGS
18 - BRIDGE PLATFORM RAILINGS
19 - CABARET SIGN
20 - CONDUCTOR'S HATCH & FOOTLIGHTS
21 - HOUSE STIARS
22 - SCRIM
23 - CYCLORAMA

VECTORWORKS EDUCATIONAL VERSION

PRODUCER: CAL. STATE U., FULLERTON	SCENIC DESIGNER: DESTINY MANEWAL	FILE NAME: CABARET 3D 11-07-21.vwx
VENUE: LITTLE THEATRE	DIRECTOR: SAUNDRA MCCLAIN	DRAWN BY: DESTINY MANEWAL
TECHNICAL DIRECTOR: JORDAN KIRBY	SCALE: N/A	DATE: 10/08/21

SHEET TITLE: COVER SHEET

APPROVED BY:

REVISED: 11/8/21

SHEET: 1 OF 27

VECTORWORKS EDUCATIONAL VERSION

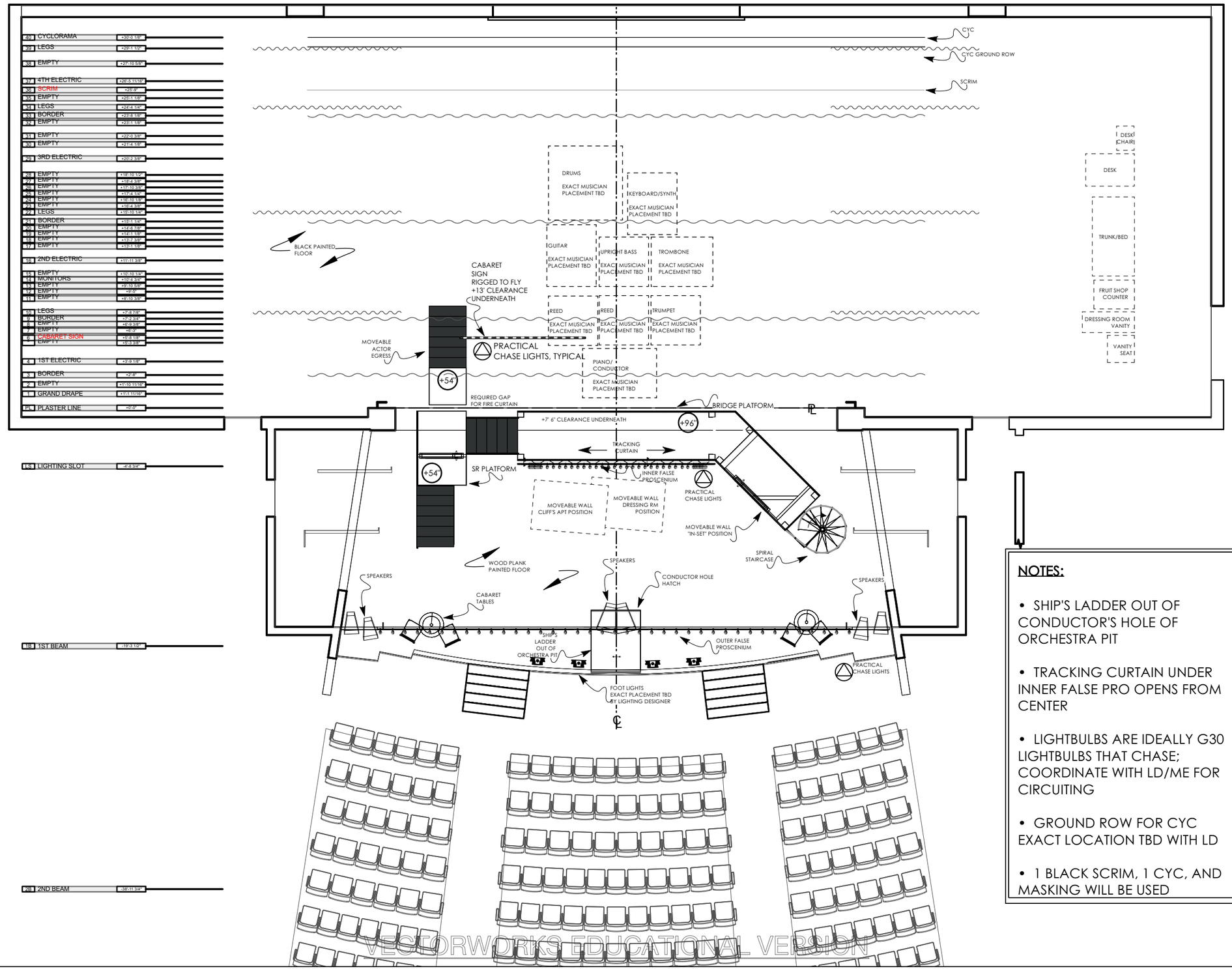

NOTES:

- SHIP'S LADDER OUT OF CONDUCTOR'S HOLE OF ORCHESTRA PIT
- TRACKING CURTAIN UNDER INNER FALSE PRO OPENS FROM CENTER
- LIGHTBULBS ARE IDEALLY G30 LIGHTBULBS THAT CHASE; COORDINATE WITH LD/ME FOR CIRCUITING
- GROUND ROW FOR CYC EXACT LOCATION TBD WITH LD
- 1 BLACK SCRIM, 1 CYC, AND MASKING WILL BE USED

VECTORWORKS EDUCATIONAL VERSION

FILE NAME: CABARET 3D 11-07-21.vwx
DRAWN BY: DESTINY MANEWAL
DATE: 10/08/21
SCENIC DESIGNER: DESTINY MANEWAL
DIRECTOR: SAUNDRA MCCLAIN
SCALE: 1/8" = 1'-0"
PRODUCER: CAL. STATE U., FULLERTON
VENUE: LITTLE THEATRE
TECHNICAL DIRECTOR: JORDAN KIRBY
SHEET TITLE: GROUND PLAN
APPROVED BY:
REVISED: 11/8/21
SHEET: 2 OF 27

VECTORWORKS EDUCATIONAL VERSION

NOTES:

- SHIP'S LADDER OUT OF CONDUCTOR'S HOLE OF ORCHESTRA PIT
- TRACKING CURTAIN UNDER INNER FALSE PRO OPENS FROM CENTER
- LIGHTBULBS ARE IDEALLY G30 LIGHTBULBS THAT CHASE; COORDINATE WITH LD/ME FOR CIRCUITING
- GROUND ROW FOR CYC EXACT LOCATION TBD WITH LD
- 1 BLACK SCRIM, 1 CYC, AND MASKING WILL BE USED

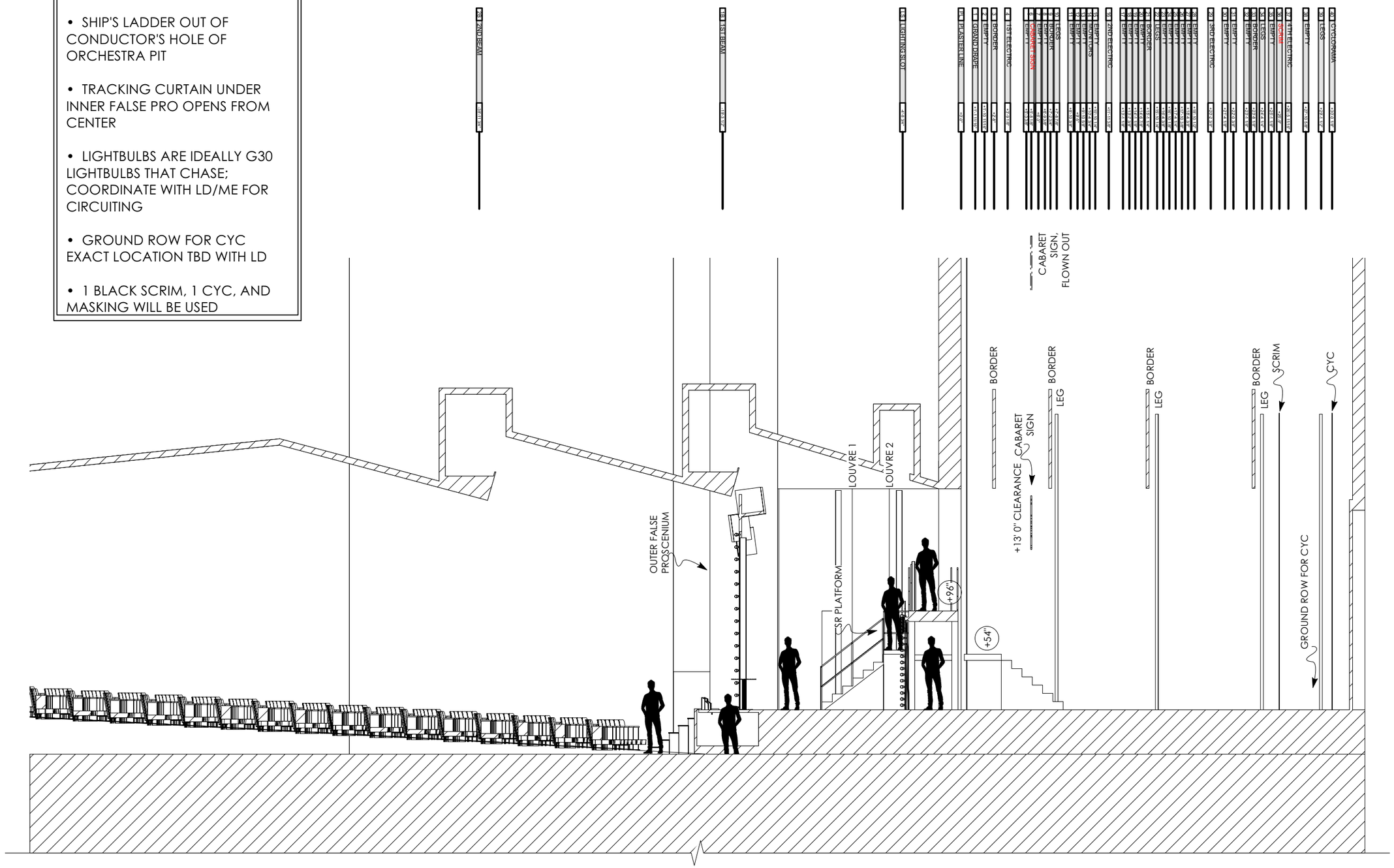

VECTORWORKS EDUCATIONAL VERSION

PRODUCER: CAL. STATE U., FULLERTON	SCENIC DESIGNER: DESTINY MANEWAL	FILE NAME: CABARET 3D 11-07-21.vwx	
VENUE: LITTLE THEATRE	DIRECTOR: SAUNDRA MCCLAIN	DRAWN BY: DESTINY MANEWAL	
TECHNICAL DIRECTOR: JORDAN KIRBY	SCALE: 1/4" = 1'-0"	DATE: 10/08/21	

SHEET TITLE: SR CENTER LINE SECTION

APPROVED BY:

REVISED: 11/8/21

SHEET: 3 OF 27

VECTORWORKS EDUCATIONAL VERSION

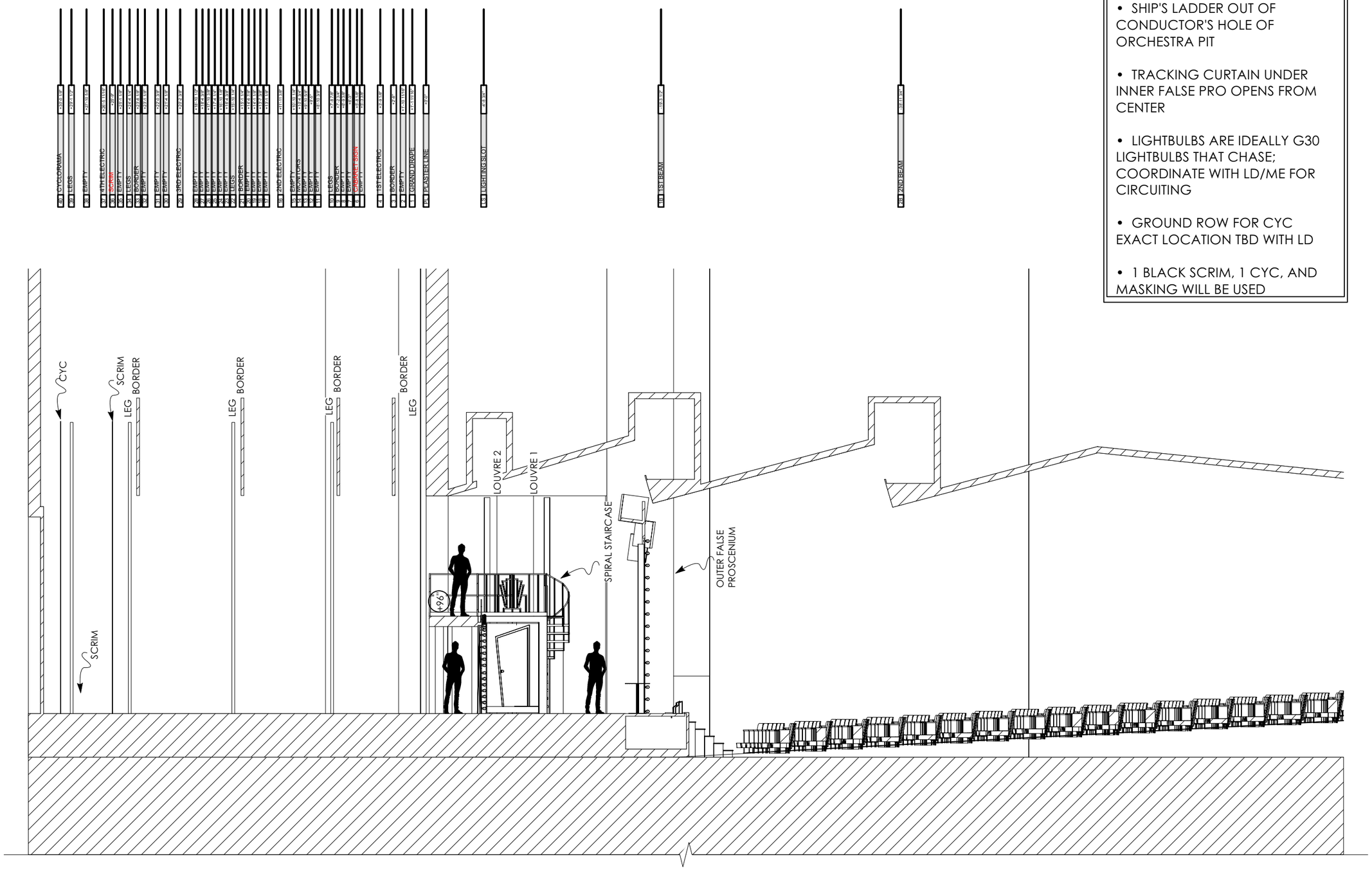

NOTES:

- SHIP'S LADDER OUT OF CONDUCTOR'S HOLE OF ORCHESTRA PIT
- TRACKING CURTAIN UNDER INNER FALSE PRO OPENS FROM CENTER
- LIGHTBULBS ARE IDEALLY G30 LIGHTBULBS THAT CHASE; COORDINATE WITH LD/ME FOR CIRCUITING
- GROUND ROW FOR CYC EXACT LOCATION TBD WITH LD
- 1 BLACK SCRIM, 1 CYC, AND MASKING WILL BE USED

PRODUCER: CAL. STATE U., FULLERTON	SCENIC DESIGNER: DESTINY MANEWAL	FILE NAME: CABARET 3D 11-07-21.vwx	
VENUE: LITTLE THEATRE	DIRECTOR: SAUNDRA MCCLAIN	DRAWN BY: DESTINY MANEWAL	
TECHNICAL DIRECTOR: JORDAN KIRBY	SCALE: 1/4" = 1'-0"	DATE: 10/08/21	

SHEET TITLE: SL CENTER LINE SECTION

APPROVED BY:

REVISED: 11/8/21

SHEET: 4 OF 27

VECTORWORKS EDUCATIONAL VERSION

VECTORWORKS EDUCATIONAL VERSION

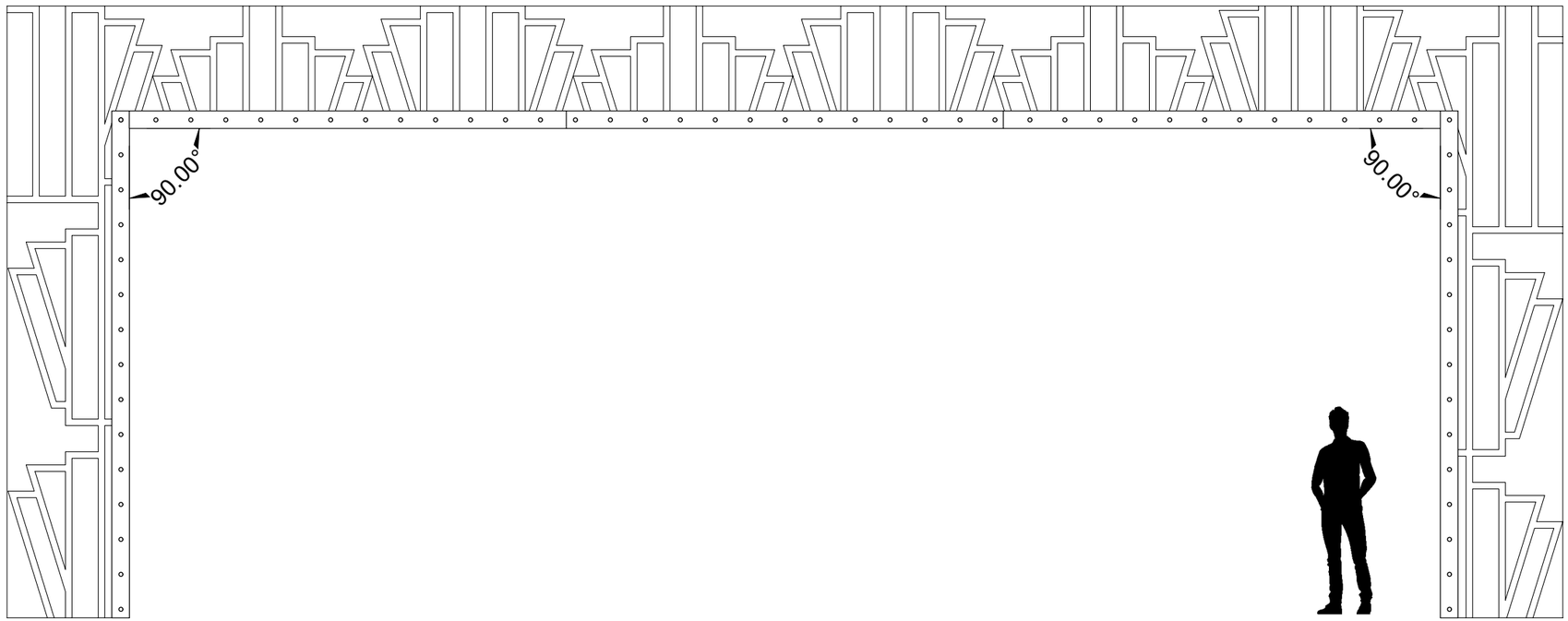

1 OUTER FALSE PROSCENIUM - FRONT VIEW
Scale: 1/4"=1'-0"

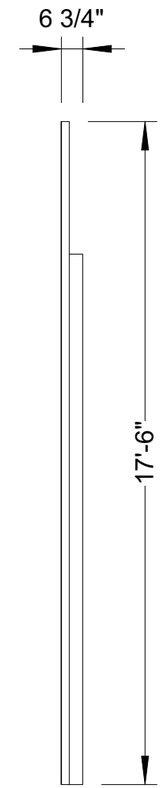

3 SIDE VIEW
Scale: 1/4"=1'-0"

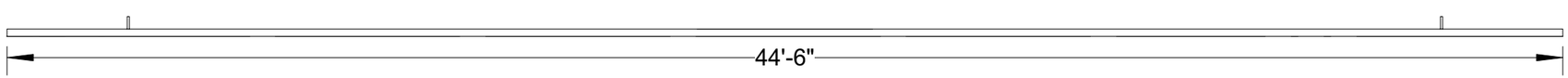

2 OUTER FALSE PROSCENIUM - PLAN VIEW
Scale: 1/4"=1'-0"

NOTES:

- STOCK FALSE PROSCENIUM, ALREADY ACKNOWLEDGES SPEAKERS AND SET FOR RIGGING
- ADD 6" TO INNER EDGE FOR CHASE LIGHTS
- ADD 6" REVEAL TO SIDES TO HIDE WIRING OF LIGHTING
- LIGHTBULBS ARE IDEALLY G30 LIGHTBULBS THAT CHASE; COORDINATE WITH LD/ME FOR CIRCUITING
- 67 CHASE LIGHTS AROUND EDGE
- EXACT PROSCENIUM PAINT TREATMENT PATTERN TBD, ANTIQUE GOLD PAINT TREATMENT

VECTORWORKS EDUCATIONAL VERSION

PRODUCER: CAL. STATE U., FULLERTON	SCENIC DESIGNER: DESTINY MANEWAL	FILE NAME: CABARET 3D 11-07-21.vwx
VENUE: LITTLE THEATRE	DIRECTOR: SAUNDRA MCCLAIN	DRAWN BY: DESTINY MANEWAL
TECHNICAL DIRECTOR: JORDAN KIRBY	SCALE: 1/4" = 1'-0"	DATE: 10/08/21

SHEET TITLE: OUTER FALSE PROSCENIUM

APPROVED BY:

REVISED: 11/8/21

SHEET: 5 OF 27

VECTORWORKS EDUCATIONAL VERSION

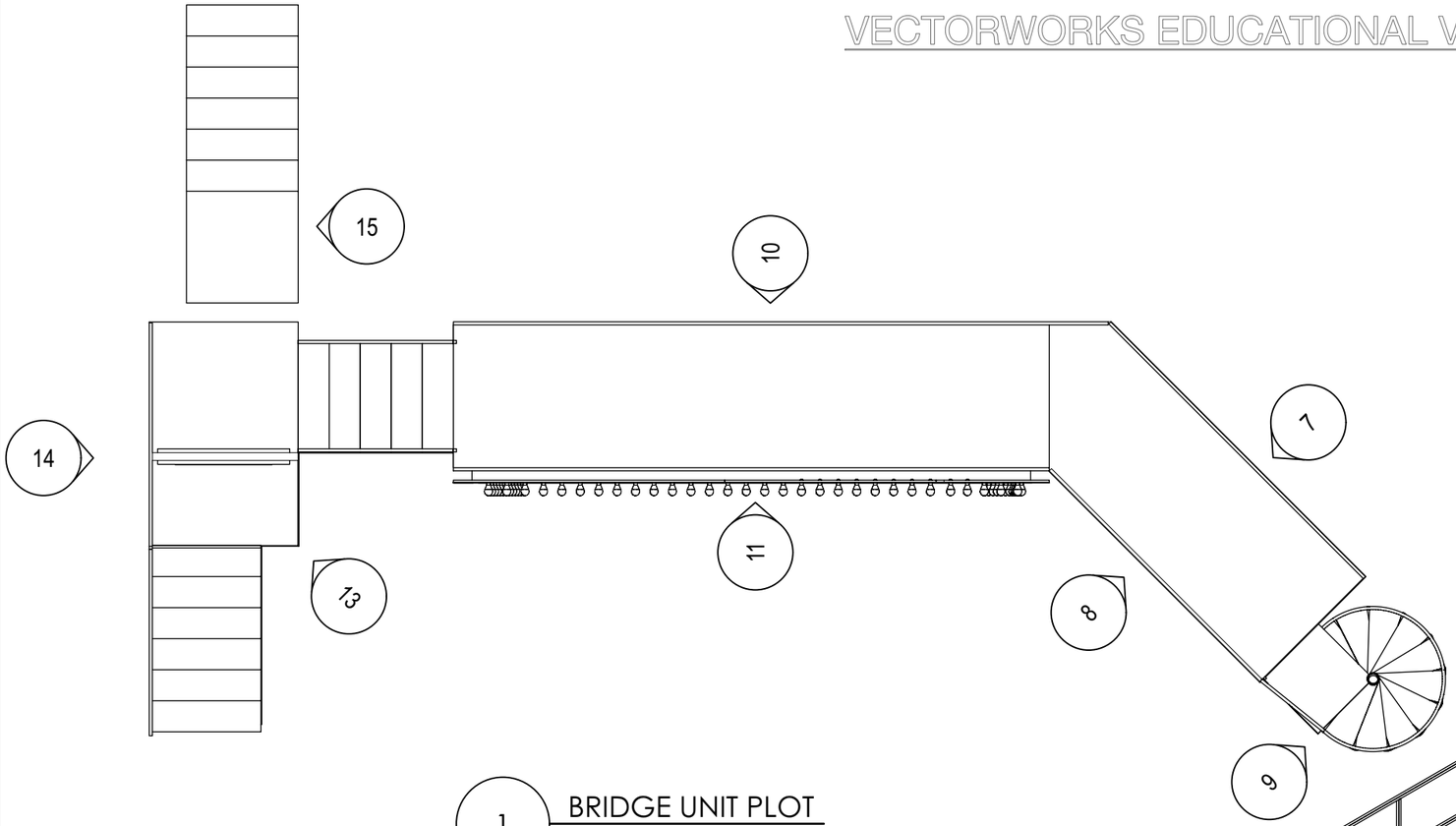

1 BRIDGE UNIT PLOT
Scale: 1/4"=1'-0"

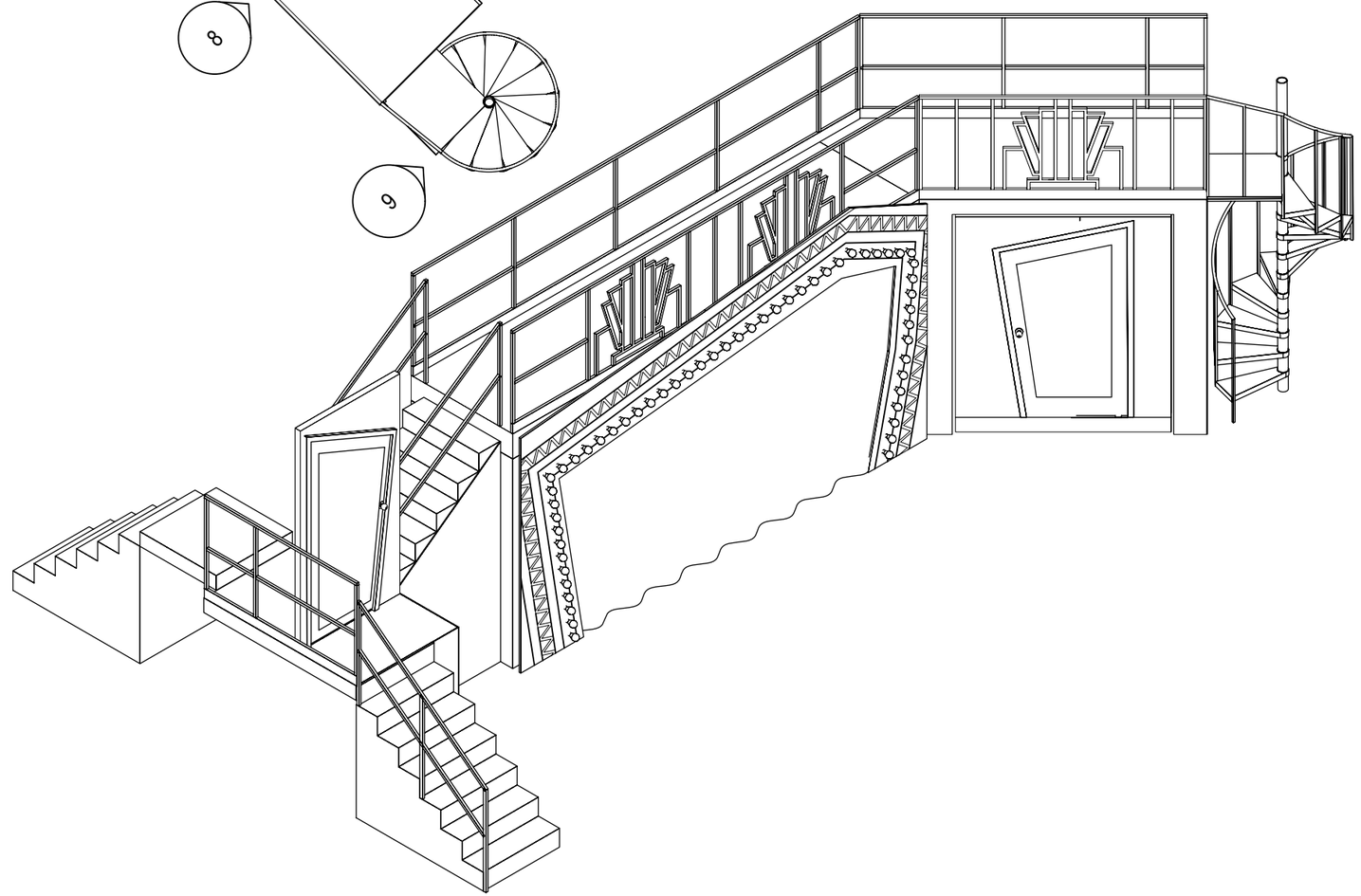

NOTES:

- LEGS WHERE NEEDED UNLESS INDICATED
- TRACKING CURTAIN OPENS FROM CENTER
- ACTOR EGRESS STAIRS ROVE AS NECESSARY
- ADD BRACING FROM SPIRAL STAIRCASE TO LOUVRE AS NECESSARY
- INNER FALSE PROSCENIUM LIGHTS, IDEALLY G30 LIGHT BULBS THAT CHASE. COORDINATE WITH LD/ME REGARDING CIRCUITING

VECTORWORKS EDUCATIONAL VERSION

PRODUCER: CAL. STATE U., FULLERTON	SCENIC DESIGNER: DESTINY MANEWAL	FILE NAME: CABARET 3D 11-07-21.vwx
VENUE: LITTLE THEATRE	DIRECTOR: SAUNDRA MCCLAIN	DRAWN BY: DESTINY MANEWAL
TECHNICAL DIRECTOR: JORDAN KIRBY	SCALE: 1/4" = 1'-0"	DATE: 10/08/21

SHEET TITLE: BRIDGE UNIT PLOT

APPROVED BY:

REVISED: 11/8/21

SHEET: 6 OF 27

VECTORWORKS EDUCATIONAL VERSION

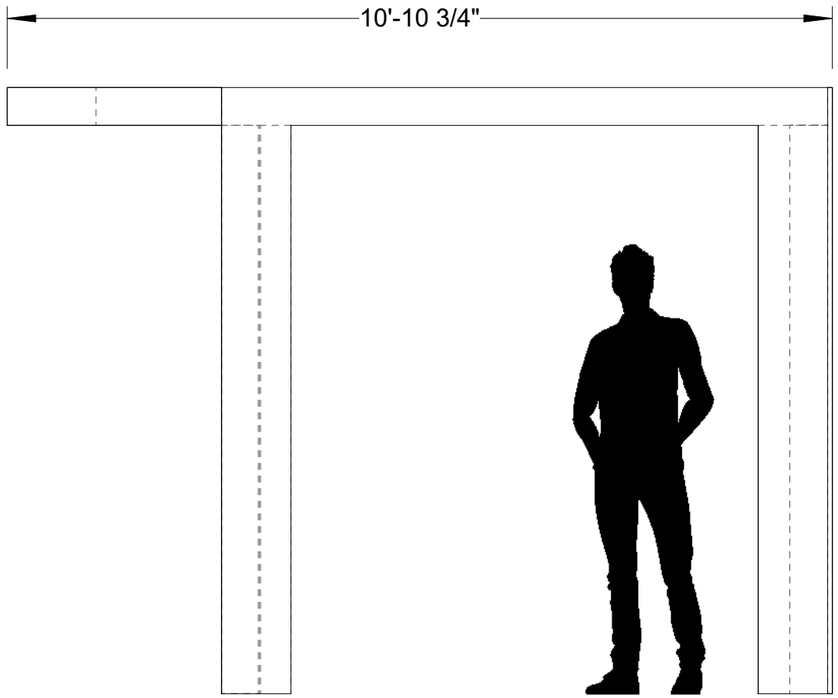

1 SL SECTION - FRONT VIEW
Scale: 1/2"=1'-0"

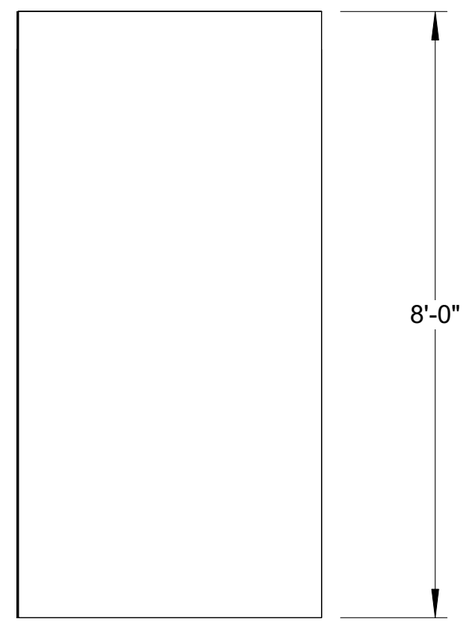

2 SL SECTION - SIDE VIEW
Scale: 1/2"=1'-0"

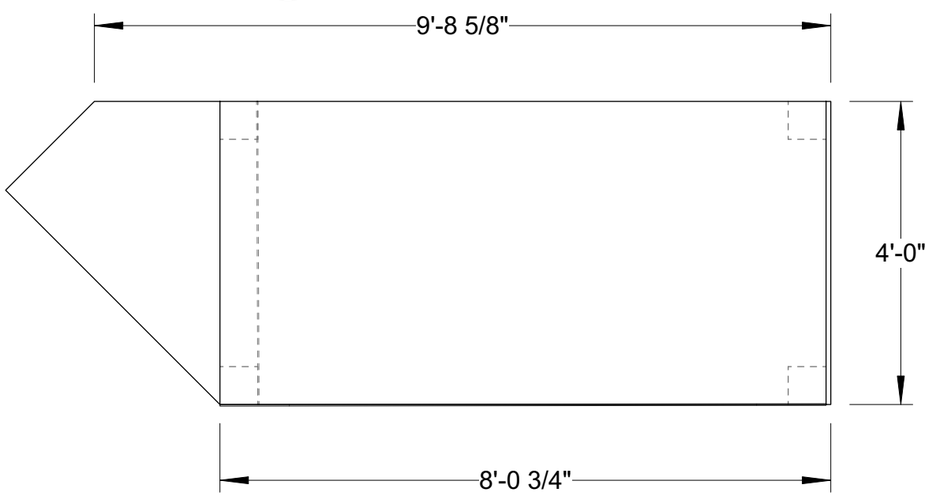

3 SL SECTION - PLAN VIEW
Scale: 1/2"=1'-0"

NOTES:

- MOVEABLE WALL UNIT FITS AGAINST FRONT OF PLATFORM UNIT
- FACING ON FRONT AND RIGHT SIDE OF UNIT RECIEVES BLACK AND GOLD PAINT TREATMENT
- MASKING FACING UNDER UNIT ON LEFT LEGS PAINTED BLACK
- ADJUST LEG SIZING AS NEEDED

VECTORWORKS EDUCATIONAL VERSION

FILE NAME: CABARET 3D 11-07-21.vwx
SCENIC DESIGNER: DESTINY MANEWAL
DRAWN BY: DESTINY MANEWAL
DIRECTOR: SAUNDRA MCCLAIN
DATE: 10/08/21
SCALE: 1/4" = 1'-0"
PRODUCER: CAL. STATE U., FULLERTON
VENUE: LITTLE THEATRE
TECHNICAL DIRECTOR: JORDAN KIRBY
SHEET TITLE: BRIDGE PLATFORM - SL SECTION
APPROVED BY:
REVISED: 11/8/21
SHEET: 7 OF 27

VECTORWORKS EDUCATIONAL VERSION

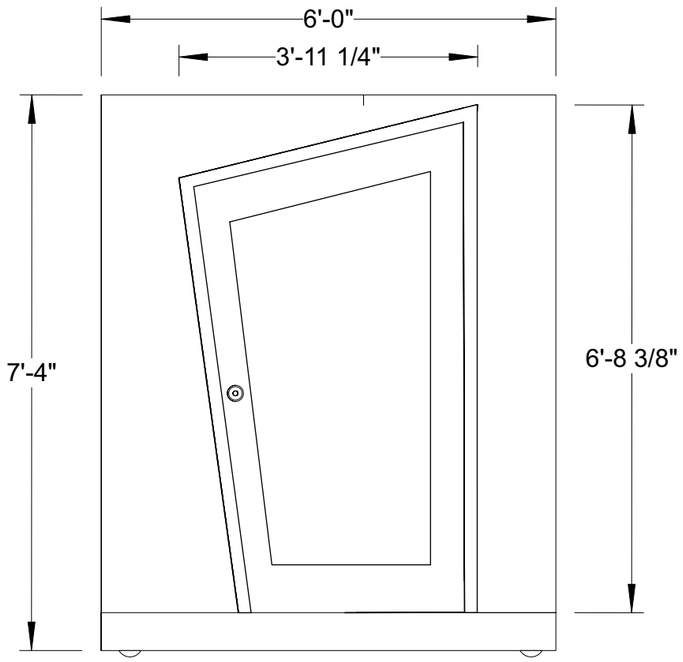

1 MOVEABLE WALL - FRONT VIEW
Scale: 1/2"=1'-0"

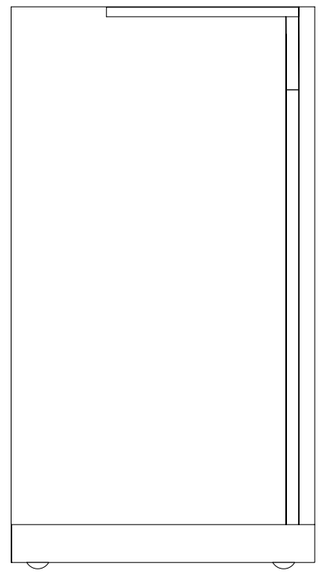

2 MOVEABLE WALL - SIDE VIEW
Scale: 1/2"=1'-0"

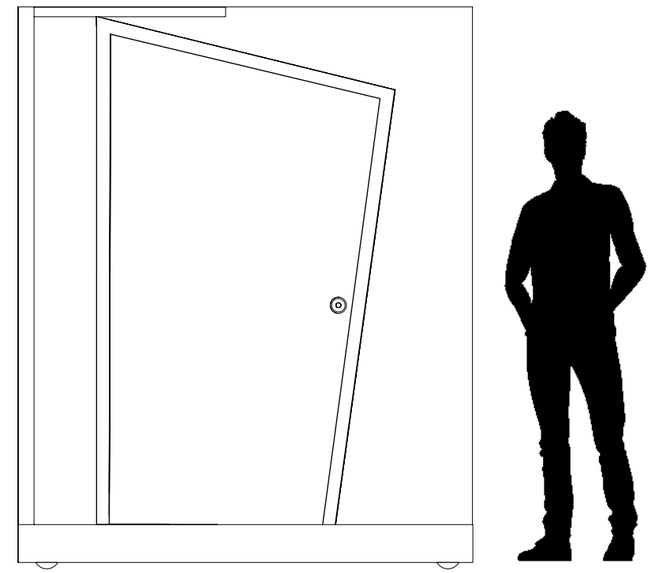

3 MOVEABLE WALL - BACK VIEW
Scale: 1/2"=1'-0"

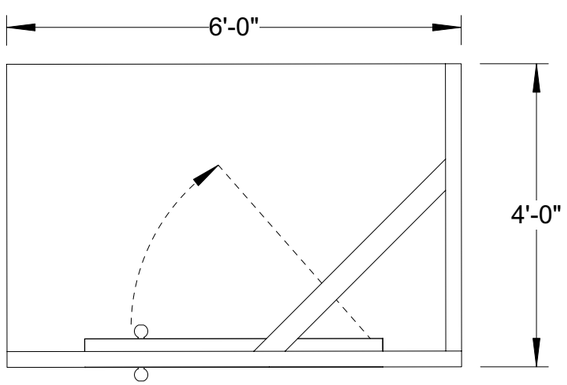

4 MOVEABLE WALL - PLAN VIEW
Scale: 1/2"=1'-0"

NOTES:

- MOVEABLE WALL UNIT FITS AGAINST FRONT OF SL BRIDGE PLATFORM SECTION
- DOOR IS PRACTICAL
- DOORKNOBS FROM STOCK
- UNIT MOVES AND ROTATES AROUND STAGE, EXACT PLACEMENT TBD
- CASTERS, LOCKS, AND BREAKS NEEDED ON UNIT; DIAGONAL BRACING AT TOP OF UNIT BETWEEN BOTH WALL SECTIONS: ADJUST AS NEEDED
- UNIT WILL BE MOVED BY CREW AND ACTORS (TBD)
- TEAL PAINT TREATMENT ON DOOR
- BLACK AND GOLD PAINT TREATMENT ON BOTH SIDES OF WALL FACINGS

VECTORWORKS EDUCATIONAL VERSION

FILE NAME: CABARET 3D 11-07-21.vwx
SCENIC DESIGNER: DESTINY MANEWAL
DRAWN BY: DESTINY MANEWAL
PRODUCER: CAL. STATE U., FULLERTON
DIRECTOR: SAUNDRA MCCLAIN
DATE: 10/08/21
VENUE: LITTLE THEATRE
SCALE: 1/2" = 1'-0"
SHEET TITLE: MOVEABLE WALL UNIT
TECHNICAL DIRECTOR: JORDAN KIRBY
APPROVED BY:
REVISED: 11/8/21
SHEET: 8 OF 27

VECTORWORKS EDUCATIONAL VERSION

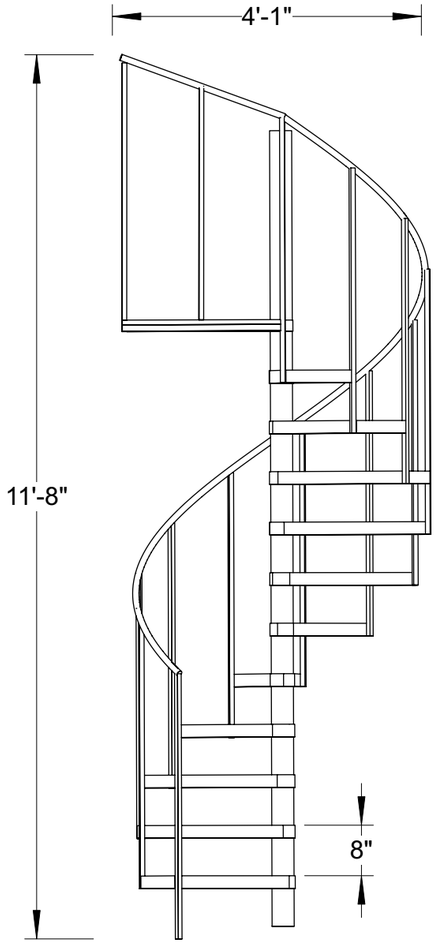

1 SPIRAL STAIRCASE - FRONT VIEW
Scale: 1/2"=1'-0"

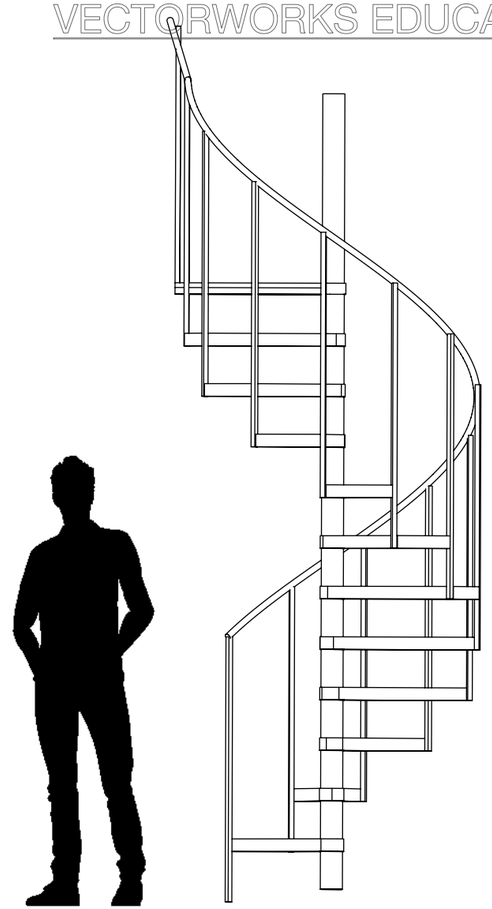

2 SPIRAL STAIRCASE - SIDE VIEW
Scale: 1/2"=1'-0"

NOTES:

- STAIRCASE FROM STOCK
- ADJUST RAILING AS NEEDED
- ADJUST LANDING OF STAIRS AS NEEDED
- SUPPORT/BRACING FROM STAIR UNIT TO LOUVRE

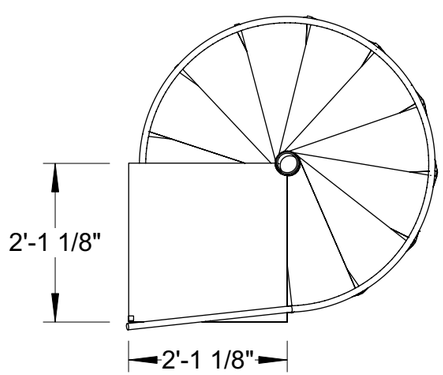

3 SPIRAL STAIRCASE - PLAN VIEW
Scale: 1/2"=1'-0"

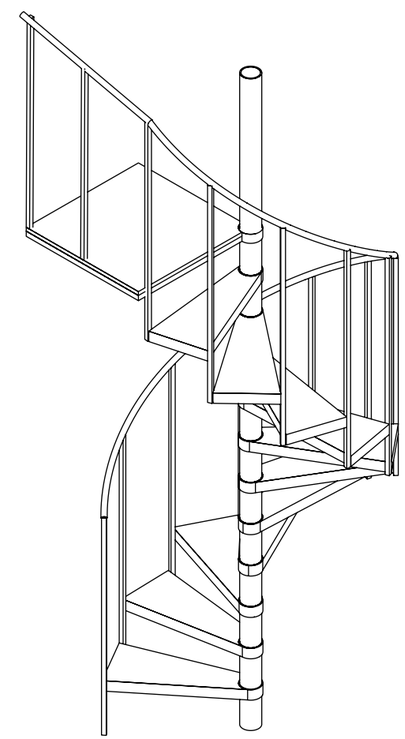

4 SPIRAL STAIRCASE - ISOMETRIC VIEW
Scale: 1/2"=1'-0"

VECTORWORKS EDUCATIONAL VERSION

FILE NAME:	CABARET 3D 11-07-21.vwx
DRAWN BY:	DESTINY MANEWAL
DATE:	10/08/21
SCENIC DESIGNER:	DESTINY MANEWAL
DIRECTOR:	SAUNDRA MCCLAIN
SCALE:	1/2" = 1'-0"
PRODUCER:	CAL. STATE U., FULLERTON
VENUE:	LITTLE THEATRE
TECHNICAL DIRECTOR:	JORDAN KIRBY
SHEET TITLE:	SPIRAL STAIRCASE
APPROVED BY:	
REVISED:	11/8/21
SHEET:	9 OF 27

VECTORWORKS EDUCATIONAL VERSION

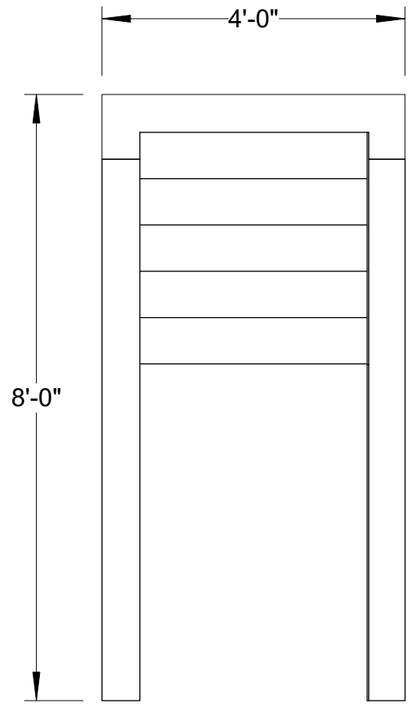

1 BRIDGE PLATFORM CENTER - SIDE VIEW
Scale: 1/2"=1'-0"

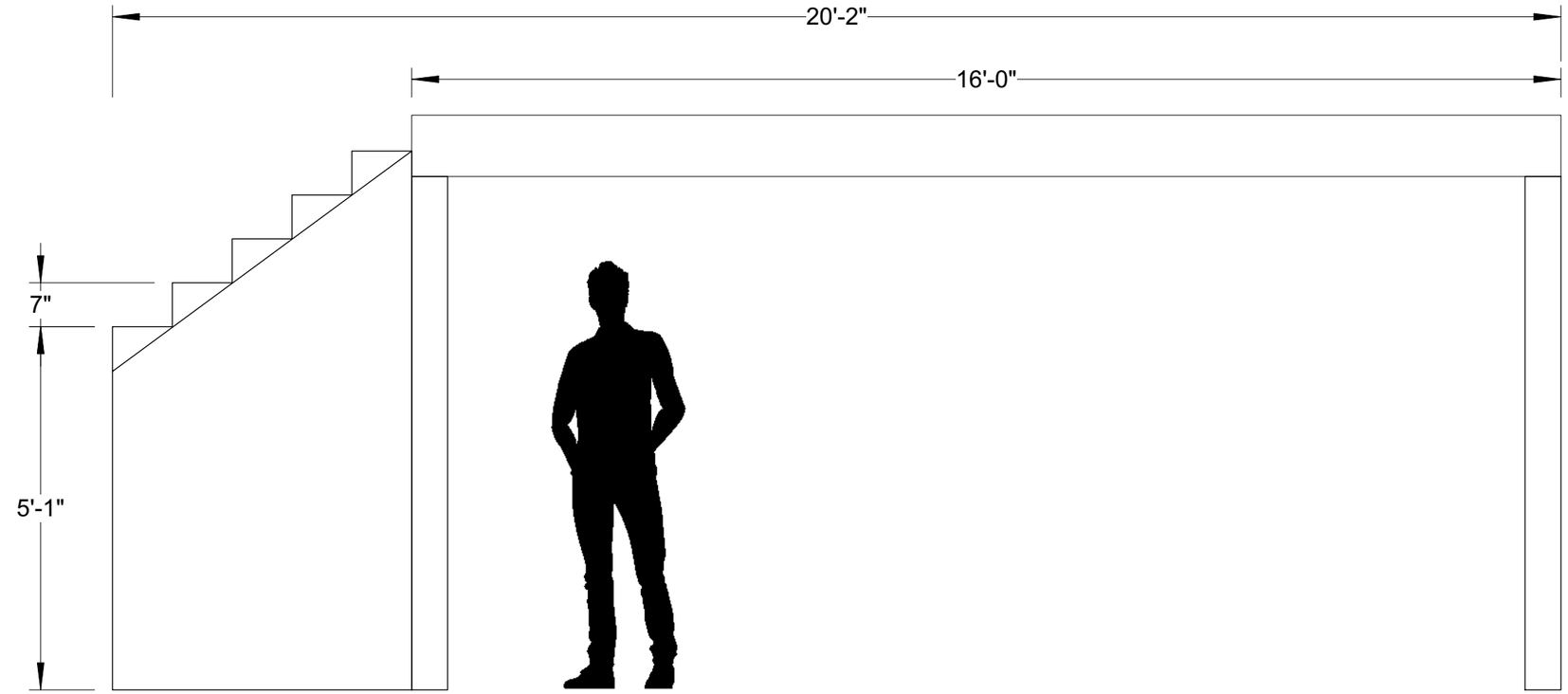

2 BRIDGE PLATFORM CENTER - FRONT VIEW
Scale: 1/2"=1'-0"

NOTES:

- STUD WALL UNITS ON EITHER SIDE OF CENTER PLATFORM
- LEGS WHERE NEEDED ON STAIRS
- SR STAIRS CONNECT TO SR PLATFORM
- 1/4" FACING ON SIDE OF STAIRS
- BLACK AND GOLD PAINT TREATMENT ON FACINGS
- WOOD PLANK PAINT TREATMENT ON TOP STAIRS

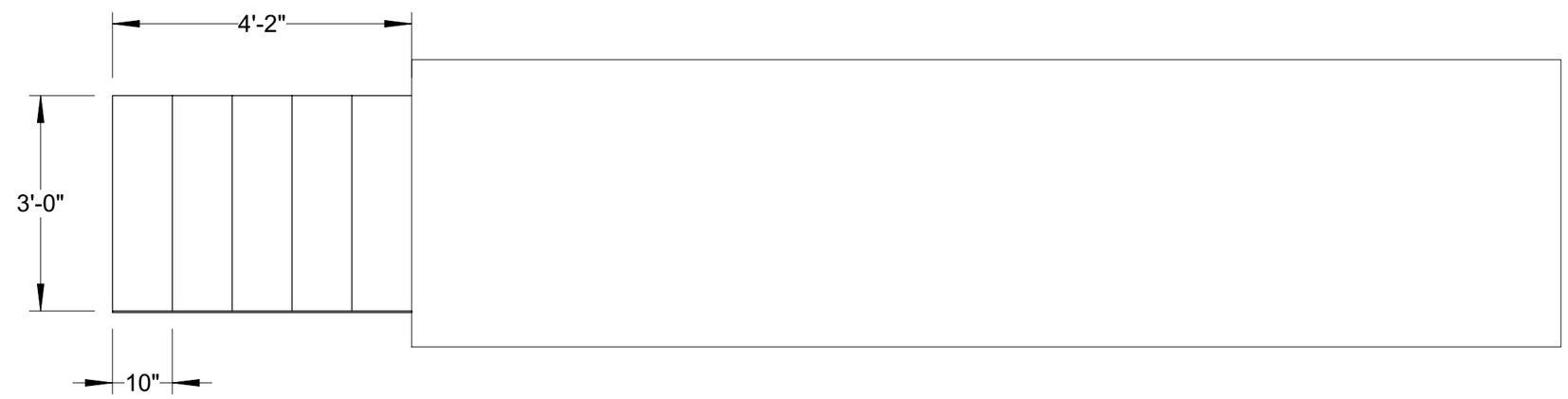

3 BRIDGE PLATFORM CENTER - FRONT VIEW
Scale: 1/2"=1'-0"

VECTORWORKS EDUCATIONAL VERSION

FILE NAME: CABARET 3D 11-07-21.vwx
DRAWN BY: DESTINY MANEWAL
DATE: 10/08/21
SCENIC DESIGNER: DESTINY MANEWAL
DIRECTOR: SAUNDRA MCCLAIN
SCALE: 1/2" = 1'-0"
PRODUCER: CAL. STATE U., FULLERTON
VENUE: LITTLE THEATRE
TECHNICAL DIRECTOR: JORDAN KIRBY
SHEET TITLE: BRIDGE PLATFORM - CENTER SECTION
APPROVED BY:
REVISED: 11/8/21
SHEET: 10 OF 27

VECTORWORKS EDUCATIONAL VERSION

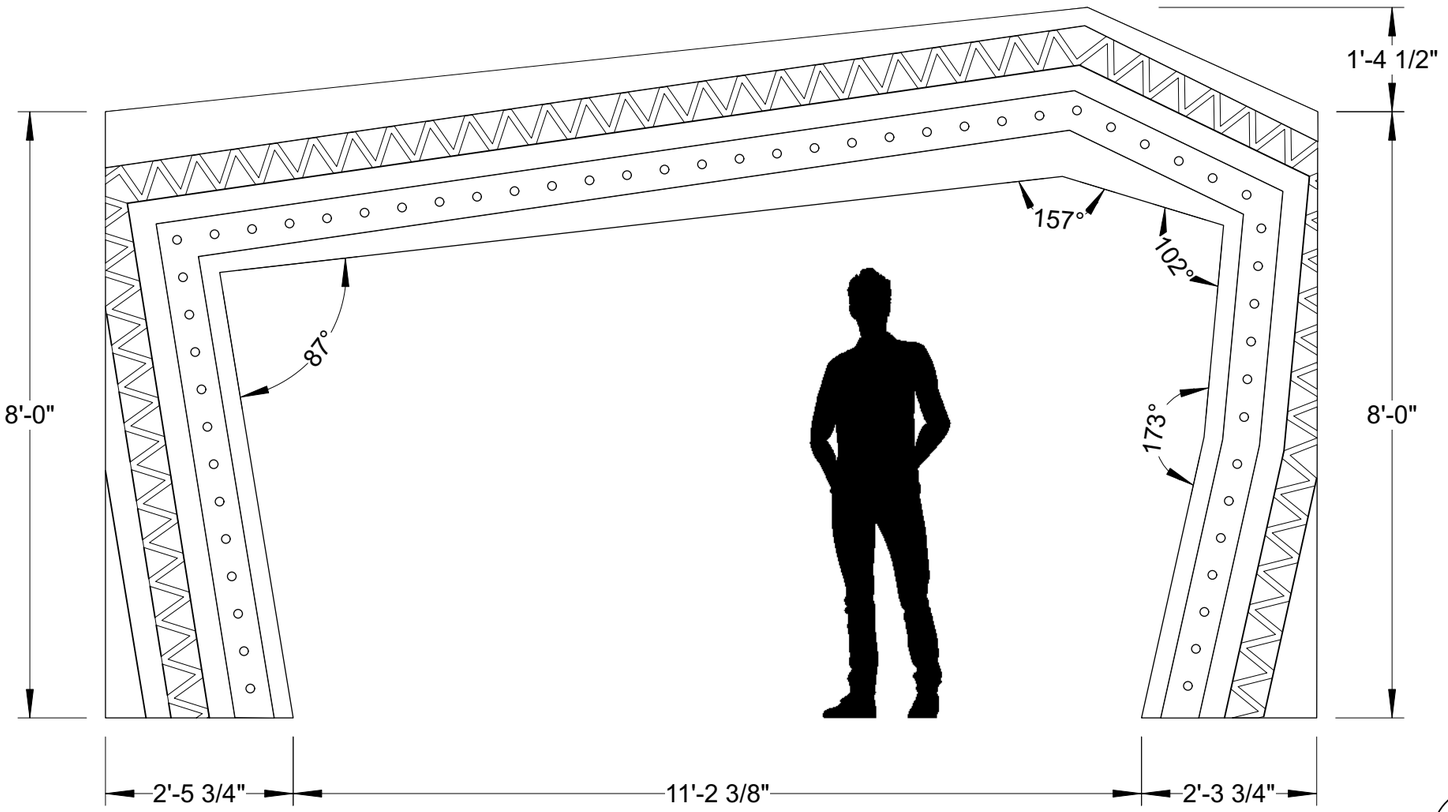

1 INNER PROSCENIUM - FRONT VIEW
Scale: 1/2"=1'-0"

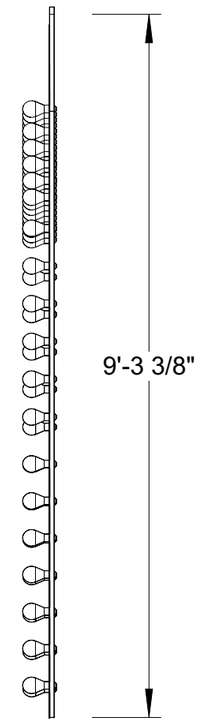

2 INNER PROSCENIUM - SIDE VIEW
Scale: 1/2"=1'-0"

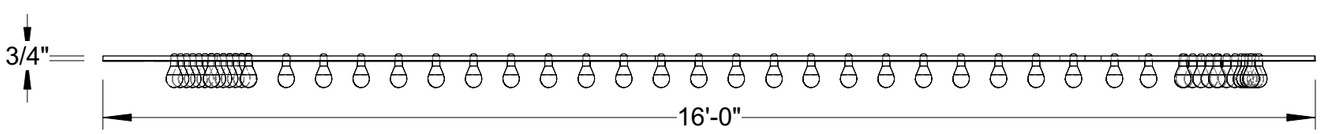

3 INNER PROSCENIUM - PLAN VIEW
Scale: 1/2"=1'-0"

NOTES:

- ATTACHED TO FRONT OF CENTER BRIDGE PLATFORM UNIT
- LIGHTBULBS ARE IDEALLY G30 LIGHTBULBS THAT CHASE; COORDINATE WITH LD/ME FOR CIRCUITING
- 55 CHASE LIGHTS
- ANTIQUED GOLD PAINT TREATMENT
- TRACKING CURTAIN BEHIND PROSCENIUM

VECTORWORKS EDUCATIONAL VERSION

PRODUCER: CAL. STATE U., FULLERTON	SCENIC DESIGNER: DESTINY MANEWAL	FILE NAME: CABARET 3D 11-07-21.vwx
VENUE: LITTLE THEATRE	DIRECTOR: SAUNDRA MCCLAIN	DRAWN BY: DESTINY MANEWAL
TECHNICAL DIRECTOR: JORDAN KIRBY	SCALE: 1/2" = 1'-0"	DATE: 10/08/21

SHEET TITLE: INNER FALSE PROSCENIUM

APPROVED BY:

REVISED: 11/8/21

SHEET: 11 OF 27

VECTORWORKS EDUCATIONAL VERSION

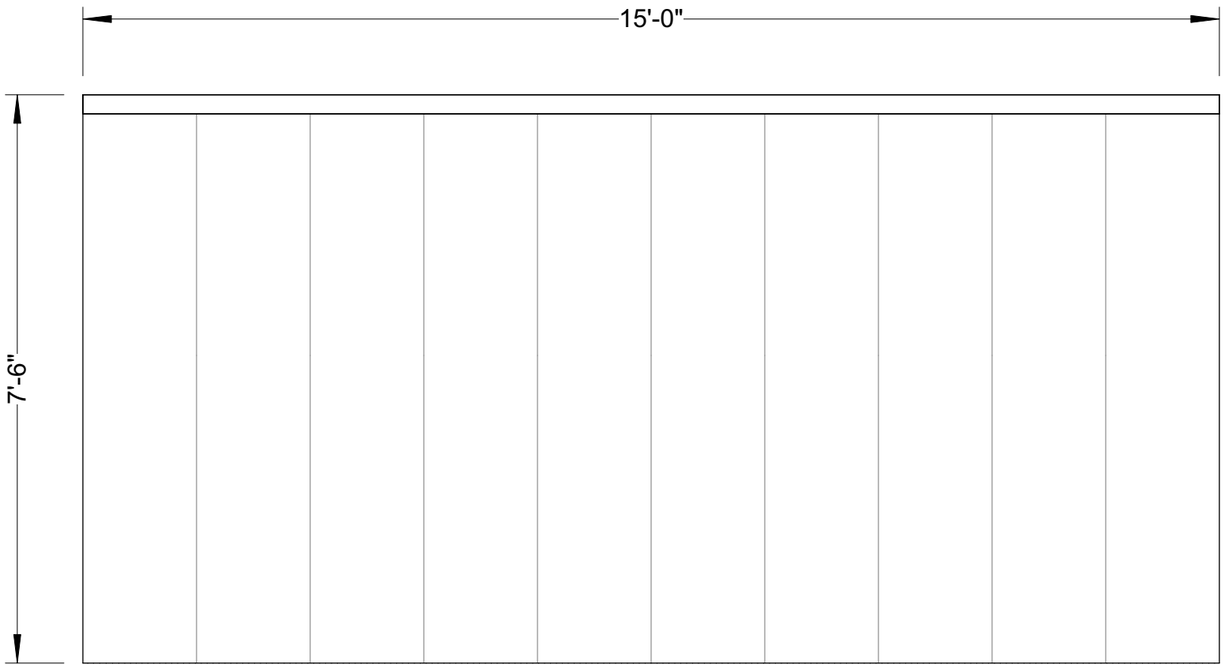

1 INNER PROSCENIUM CURTAIN - FRONT VIEW
Scale: 1/2"=1'-0"

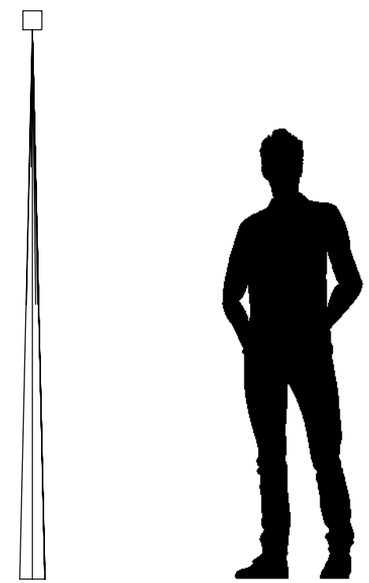

2 INNER PROSCENIUM CURTAIN - SIDE VIEW
Scale: 1/2"=1'-0"

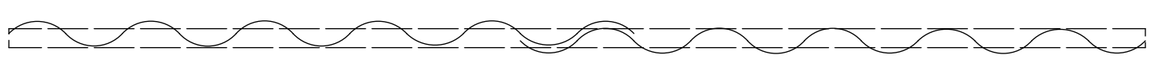

3 INNER PROSCENIUM CURTAIN - PLAN VIEW
Scale: 1/2"=1'-0"

NOTES:

- USE TRACKING HARDWARE AS NEEDED
- CURTAIN OPENS FROM CENTER
- STANDARAD WEBBING, GROMMETS, AND TIES
- CURTAIN OVERLAPS 6", TOTAL OF 16' 0" WIDE OF MATERIAL
- FABRIC FOR CURTAIN (CRIMSON COLOR): https://www.rosebrand.com/product1195/15-oz-Encore-Synthetic-Velour-IFR.aspx?cid=173&idx=1&tid=1&info=Stage%2bCurtain%2bFabrics

VECTORWORKS EDUCATIONAL VERSION

PRODUCER: CAL. STATE U., FULLERTON	SCENIC DESIGNER: DESTINY MANEWAL	FILE NAME: CABARET 3D 11-07-21.vwx
VENUE: LITTLE THEATRE	DIRECTOR: SAUNDRA MCCLAIN	DRAWN BY: DESTINY MANEWAL
TECHNICAL DIRECTOR: JORDAN KIRBY	SCALE: 1/2" = 1'-0"	DATE: 10/08/21

SHEET TITLE: INNER FALSE PROSCENIUM - CURTAIN

APPROVED BY:

REVISED: 11/8/21

SHEET: 12 OF 27

VECTORWORKS EDUCATIONAL VERSION

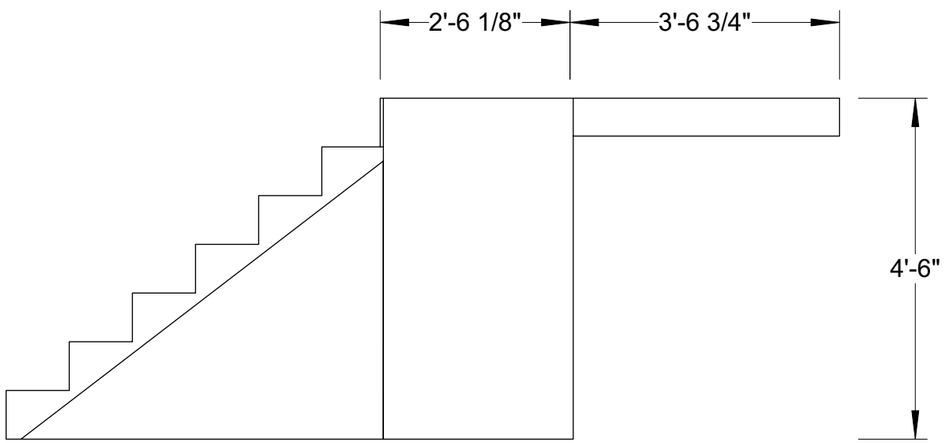

1 SR PLATFORM - FRONT VIEW
Scale: 1/2"=1'-0"

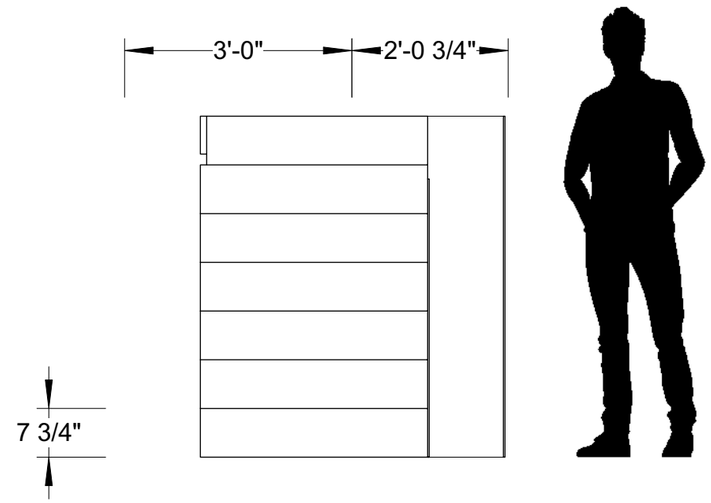

2 SR PLATFORM - SIDE VIEW
Scale: 1/2"=1'-0"

NOTES:

- DOOR IS PRACTICAL
- DOORKNOBS FROM STOCK
- PLATFORM FROM STOCK
- LEGS WHERE NEEDED
- SR PLATFORM CONNECTS TO SR SIDE OF CENTER BRIDGE PLATFORM
- STAIRS AND PLATFORM LID WOOD PLANK PAINT TREATMENT
- BLACK AND GOLD PAINT TREATMENT ON FACINGS

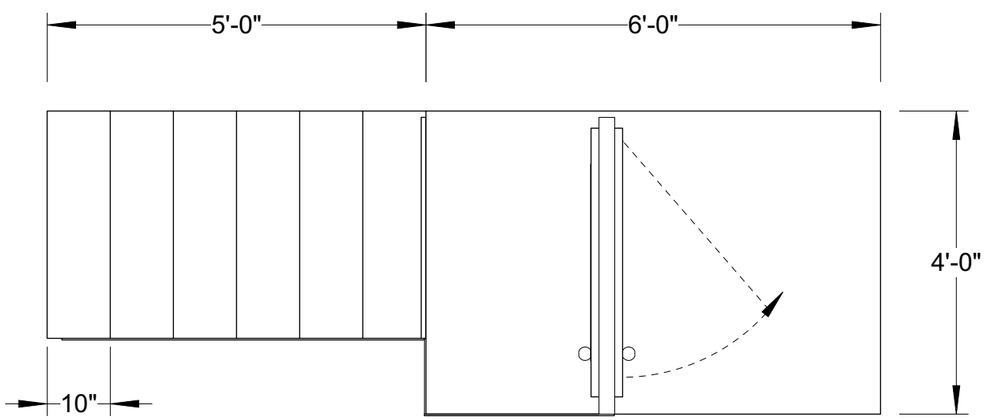

3 SR PLATFORM - PLAN VIEW
Scale: 1/2"=1'-0"

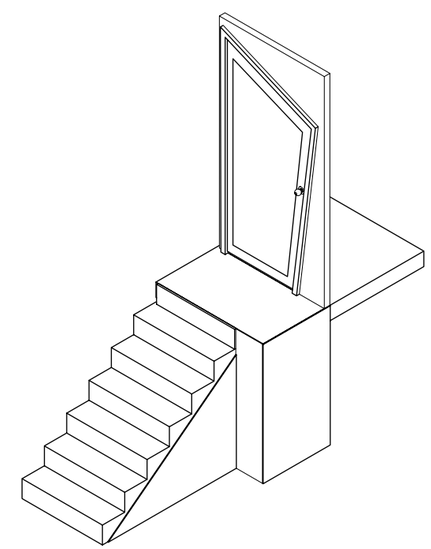

4 SR PLATFORM - ISOMETRIC VIEW
Scale: 1/4"=1'-0"

VECTORWORKS EDUCATIONAL VERSION

FILE NAME: CABARET 3D 11-07-21.vwx
DRAWN BY: DESTINY MANEWAL
DATE: 10/08/21
SCENIC DESIGNER: DESTINY MANEWAL
DIRECTOR: SAUNDRA MCCLAIN
SCALE: 1/2" = 1'-0"
PRODUCER: CAL. STATE U., FULLERTON
VENUE: LITTLE THEATRE
TECHNICAL DIRECTOR: JORDAN KIRBY
SHEET TITLE: SR PLATFORM
APPROVED BY:
REVISED: 11/8/21
SHEET: 13 OF 27

VECTORWORKS EDUCATIONAL VERSION

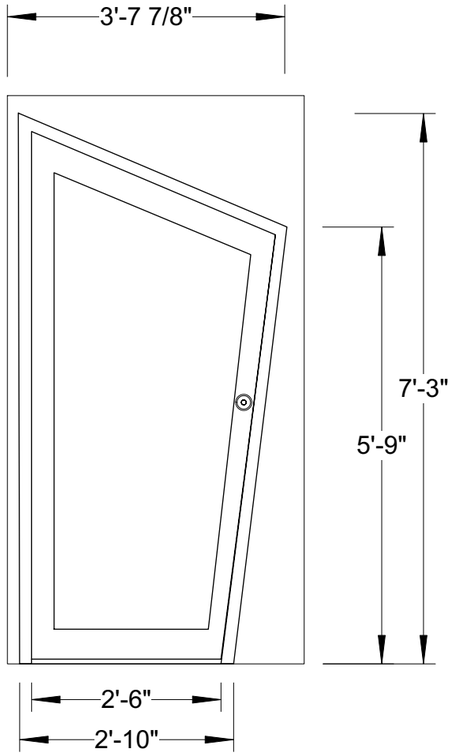

1 SR PLATFORM DOOR - FRONT VIEW
Scale: 1/2"=1'-0"

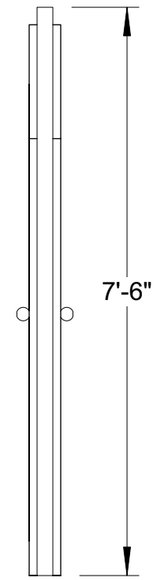

2 SR PLATFORM DOOR - SIDE VIEW
Scale: 1/2"=1'-0"

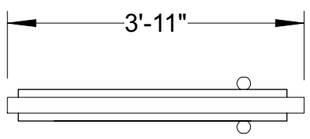

3 SR PLATFORM DOOR - PLAN VIEW
Scale: 1/2"=1'-0"

NOTES:

- DOOR IS PRACTICAL
- TEAL PAINT TREATMENT
- BLACK AND GOLD PAINT TREATMENT ON WALL SECTION OF UNIT
- RAILING ON PLATFORM ALONG LEFT SIDE OF DOOR

FILE NAME: CABARET 3D 11-07-21.vwx
SCENIC DESIGNER: DESTINY MANEWAL
DRAWN BY: DESTINY MANEWAL
DATE: 10/08/21
PRODUCER: CAL. STATE U., FULLERTON
DIRECTOR: SAUNDRA MCCLAIN
SCALE: 1/2" = 1'-0"
VENUE: LITTLE THEATRE
TECHNICAL DIRECTOR: JORDAN KIRBY
SHEET TITLE: SR PLATFORM DOOR
APPROVED BY:
REVISED: 11/8/21
SHEET: 14 OF 27

VECTORWORKS EDUCATIONAL VERSION

VECTORWORKS EDUCATIONAL VERSION

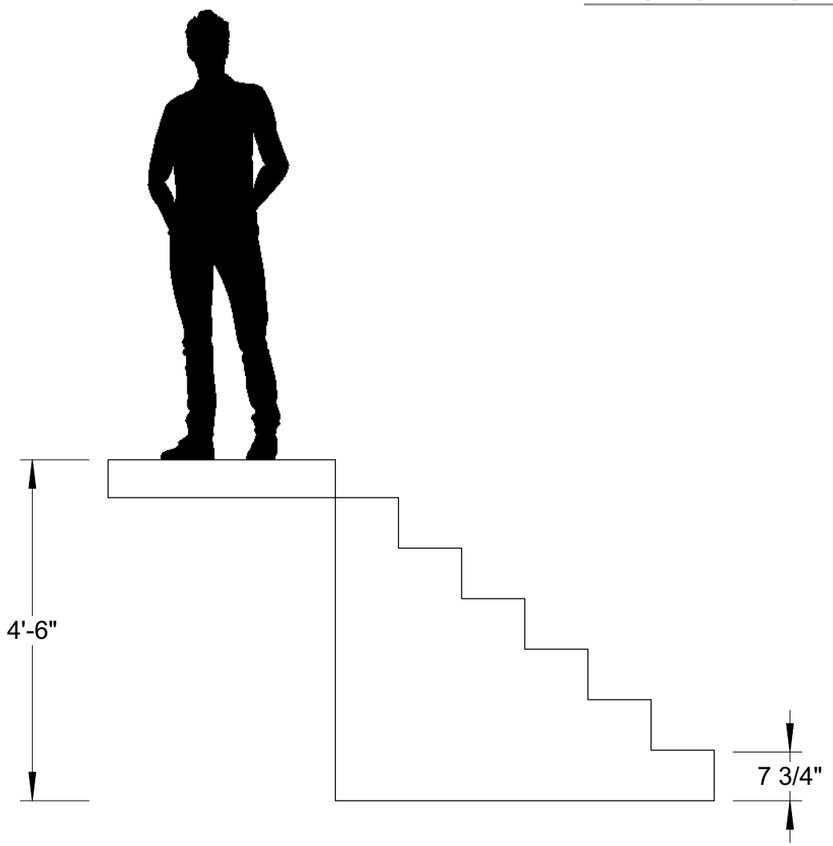

1 SR PLATFORM EGRESS - SIDE VIEW
Scale: 1/2"=1'-0"

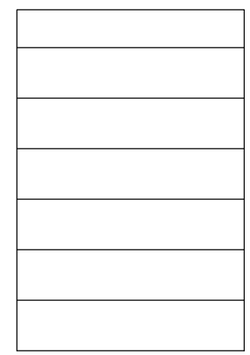

2 SR PLATFORM EGRESS - FRONT VIEW
Scale: 1/2"=1'-0"

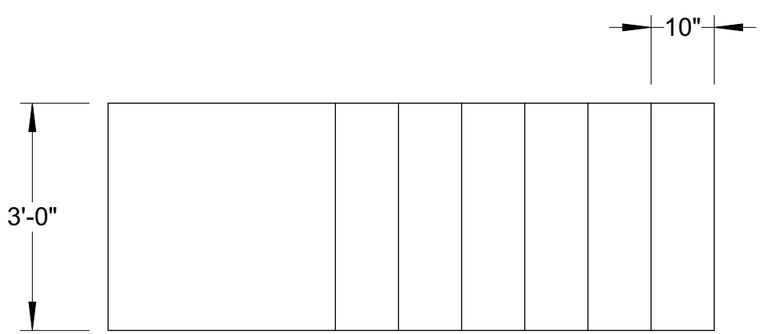

3 SR PLATFORM EGRESS - PLAN VIEW
Scale: 1/2"=1'-0"

NOTES:

- STAIRS DO NOT MEET UP WITH SR PLATFORM; GAP ALLOWANCE DUE TO SPACING FOR FIRE CURTAIN
- STAIRS UNIT SHOULD BE MOVEABLE FOR TRANSITIONING SCENERY BACKSTAGE
- CASTERS AND LEGS ADDED WHERE NEEDED

VECTORWORKS EDUCATIONAL VERSION

PRODUCER: CAL. STATE U., FULLERTON	SCENIC DESIGNER: DESTINY MANEWAL	FILE NAME: CABARET 3D 11-07-21.vwx
VENUE: LITTLE THEATRE	DIRECTOR: SAUNDRA MCCLAIN	DRAWN BY: DESTINY MANEWAL
TECHNICAL DIRECTOR: JORDAN KIRBY	SCALE: 1/2" = 1'-0"	DATE: 10/08/21

SHEET TITLE: SR PLATFORM EGRESS

APPROVED BY:

REVISED: 11/8/21

SHEET: 15 OF 27

VECTORWORKS EDUCATIONAL VERSION

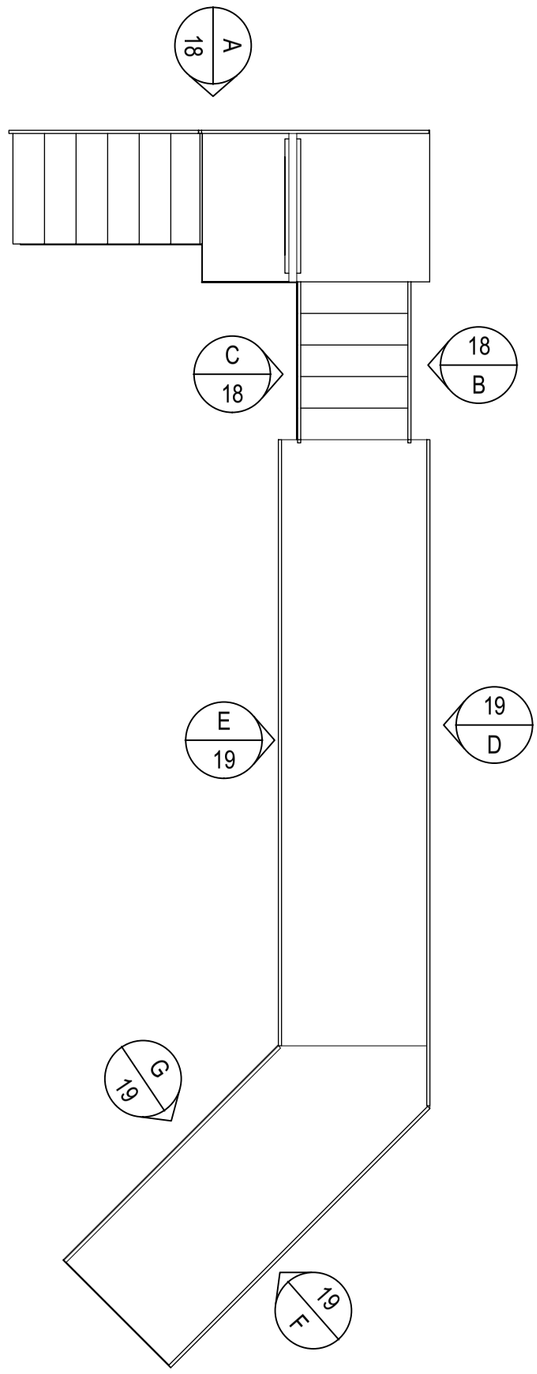

NOTES:

- ADD RAILINGS TO ESCAPE STAIRS AS NEEDED

VECTORWORKS EDUCATIONAL VERSION

SHEET: 16 OF 27	REVISED: 11/8/21	CABARET	SHEET TITLE: BRIDGE UNIT RAILING PLOT	PRODUCER: CAL. STATE U., FULLERTON	SCENIC DESIGNER: DESTINY MANEWAL	FILE NAME: CABARET 3D 11-07-21.vwx
			APPROVED BY:	VENUE: LITTLE THEATRE	DIRECTOR: SAUNDRA MCCLAIN	DRAWN BY: DESTINY MANEWAL
				TECHNICAL DIRECTOR: JORDAN KIRBY	SCALE: 1/2" = 1'-0"	DATE: 10/08/21

VECTORWORKS EDUCATIONAL VERSION

NOTES:

- SUGGESTED MATERIAL: 1" BOX TUBE
- KICKPLATE MATERIAL THICKNESS AS NEEDED
- GRAY WITH GOLD ACCENT PAINT TREATMENT ON DOWNSTAGE RAILINGS; SOLID GRAY ON UPSTAGE RAILINGS

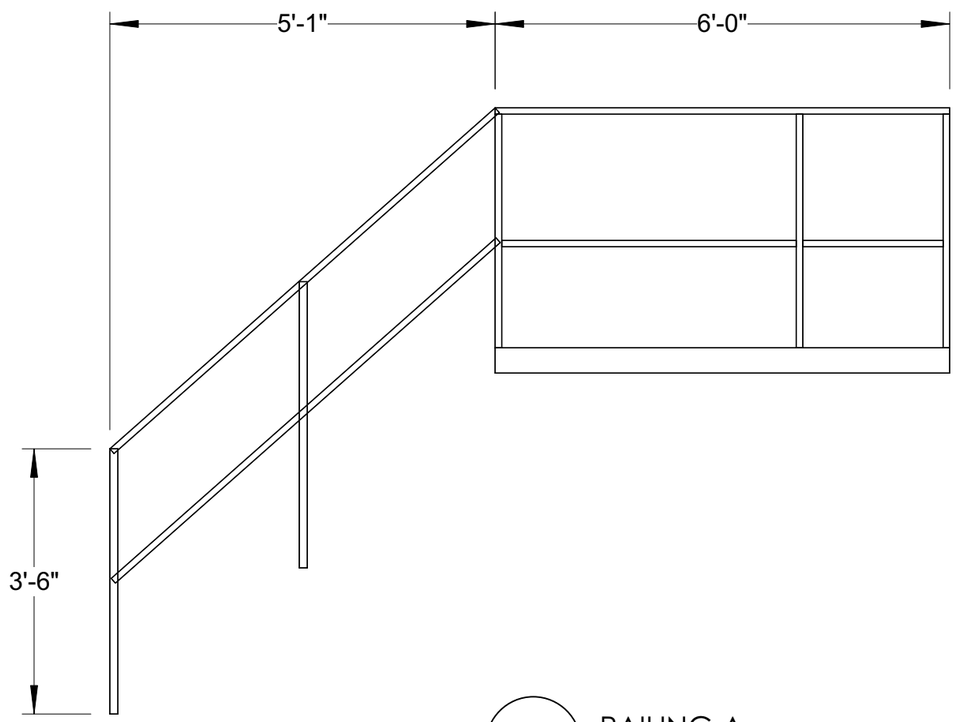

1 RAILING A
Scale: 1/2"=1'-0"

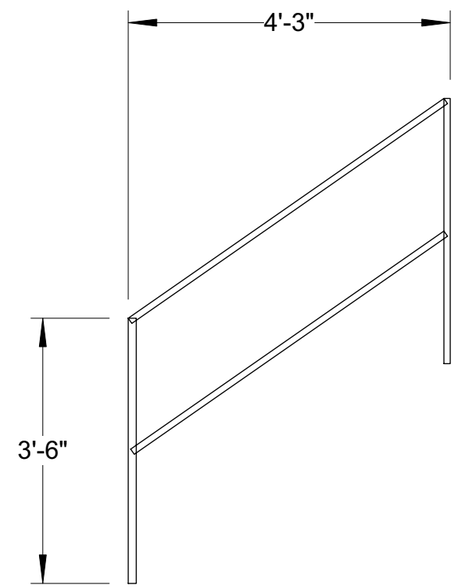

2 RAILING B
Scale: 1/2"=1'-0"

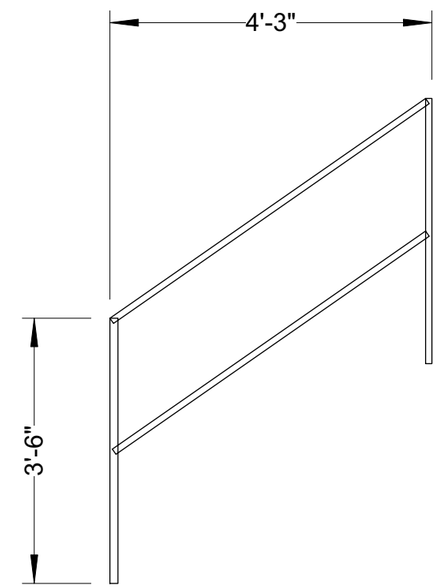

3 RAILING C
Scale: 1/2"=1'-0"

VECTORWORKS EDUCATIONAL VERSION

FILE NAME: CABARET 3D 11-07-21.vwx
DRAWN BY: DESTINY MANEWAL
DATE: 10/08/21
SCENIC DESIGNER: DESTINY MANEWAL
DIRECTOR: SAUNDRA MCCLAIN
SCALE: 1/2" = 1'-0"
PRODUCER: CAL. STATE U., FULLERTON
VENUE: LITTLE THEATRE
TECHNICAL DIRECTOR: JORDAN KIRBY
SHEET TITLE: SR PLATFORM & BRIDGE RAILINGS
APPROVED BY:
REVISED: 11/8/21
SHEET: 17 OF 27

VECTORWORKS EDUCATIONAL VERSION

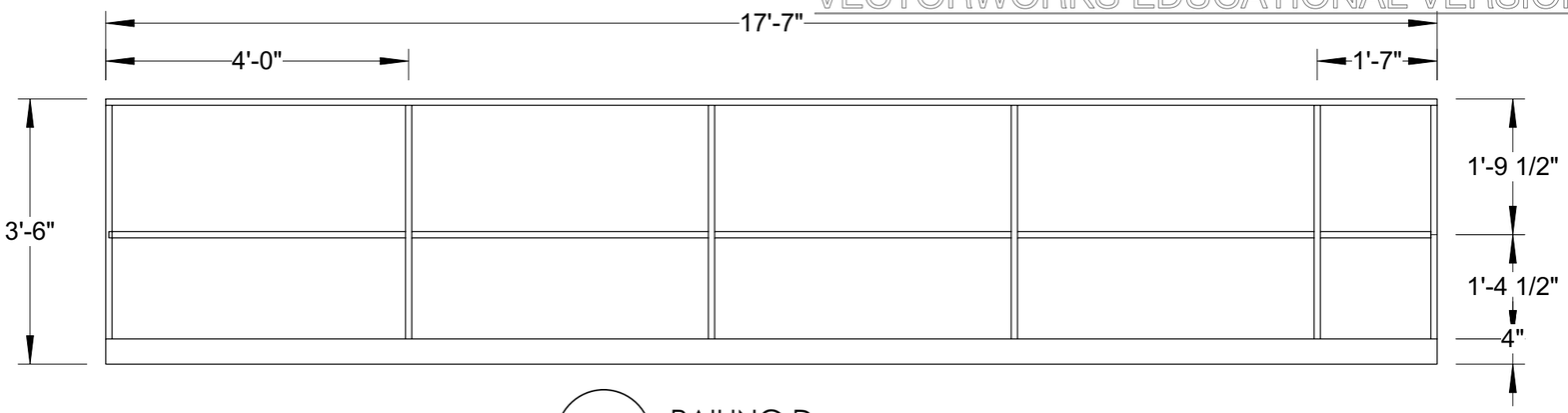

1 RAILING D
Scale: 1/2"=1'-0"

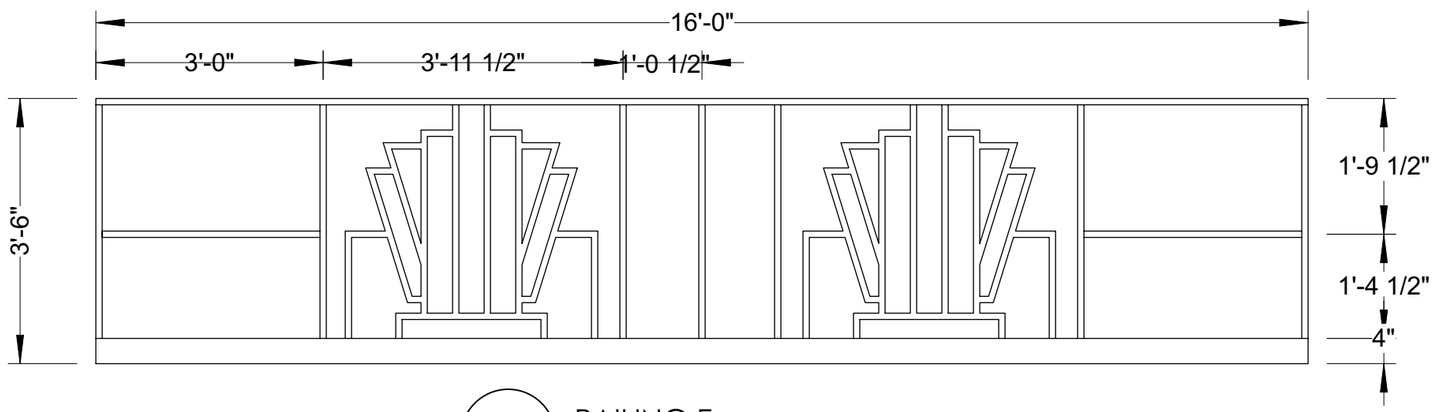

2 RAILING E
Scale: 1/2"=1'-0"

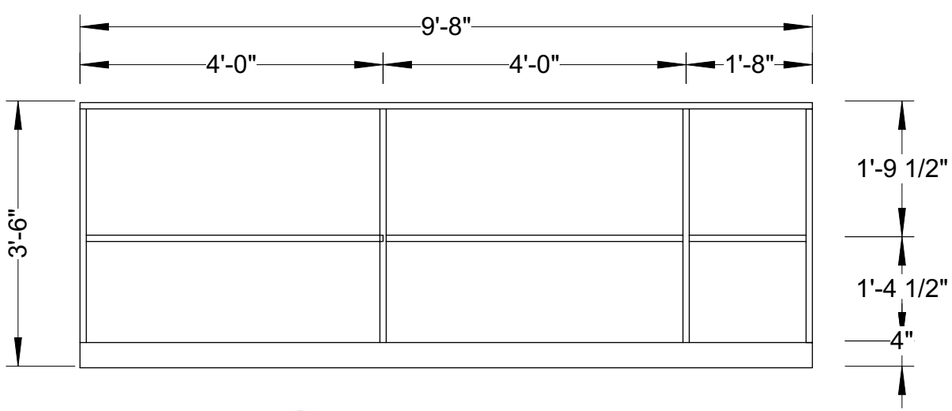

3 RAILING F
Scale: 1/2"=1'-0"

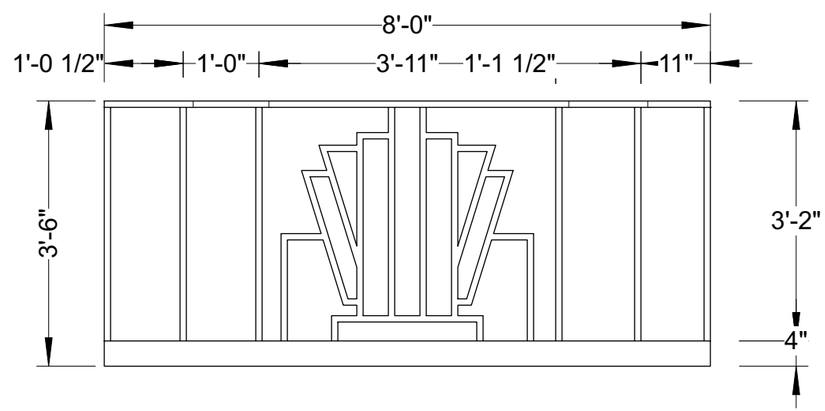

4 RAILING G
Scale: 1/2"=1'-0"

NOTES:

- SUGGESTED MATERIAL: 1" BOX TUBE
- KICKPLATE MATERIAL THICKNESS AS NEEDED
- GRAY WITH GOLD ACCENT PAINT TREATMENT ON DOWNSTAGE RAILINGS; SOLID GRAY ON UPSTAGE RAILINGS

VECTORWORKS EDUCATIONAL VERSION

FILE NAME: CABARET 3D 11-07-21.vwx
DRAWN BY: DESTINY MANEWAL
DATE: 10/08/21
SCENIC DESIGNER: DESTINY MANEWAL
DIRECTOR: SAUNDRA MCCLAIN
SCALE: 1/2" = 1'-0"
PRODUCER: CAL. STATE U., FULLERTON
VENUE: LITTLE THEATRE
TECHNICAL DIRECTOR: JORDAN KIRBY
SHEET TITLE: BRIDGE PLATFORM RAILINGS
APPROVED BY:
REVISED: 11/8/21
SHEET: 18 OF 27

VECTORWORKS EDUCATIONAL VERSION

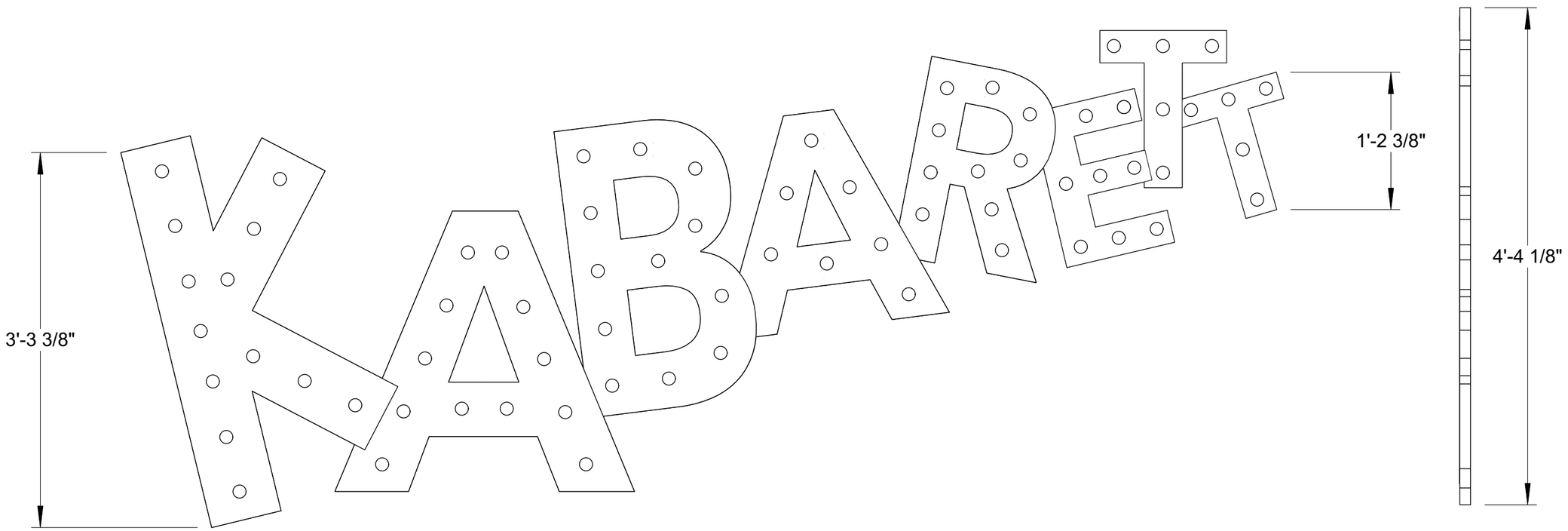

1 CABARET SIGN - FRONT VIEW
Scale: 1"=1'-0"

2 CABARET SIGN - SIDE VIEW
Scale: 1"=1'-0"

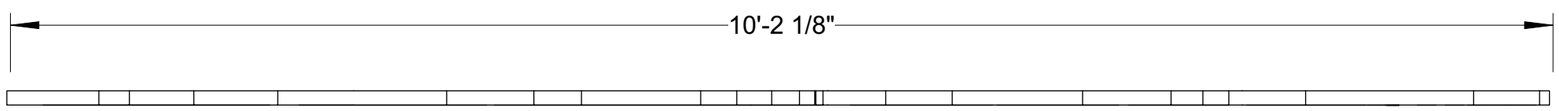

3 CABARET SIGN - PLAN VIEW
Scale: 1"=1'-0"

NOTES:

- LIGHTBULBS IDEALLY START AS G30 LIGHTBULBS THAT CHASE; LIGHTBULBS PROGRESSIVELY GET SMALLER; COORDINATE WITH LD/ME FOR CIRCUITING
- 74 LIGHTS
- SCRIBE OVERLAPPING LETTER EDGES
- FLOWN ON LINESET 6
- RED PAINT TREATMENT

VECTORWORKS EDUCATIONAL VERSION

FILE NAME: CABARET 3D 11-07-21.vwx
SCENIC DESIGNER: DESTINY MANEWAL
DRAWN BY: DESTINY MANEWAL
PRODUCER: CAL. STATE U., FULLERTON
DIRECTOR: SAUNDRA MCCLAIN
DATE: 10/08/21
VENUE: LITTLE THEATRE
SCALE: 1/2" = 1'-0"
SHEET TITLE: CABARET SIGN
TECHNICAL DIRECTOR: JORDAN KIRBY
APPROVED BY:
REVISED: 11/8/21
SHEET: 19 OF 27

VECTORWORKS EDUCATIONAL VERSION

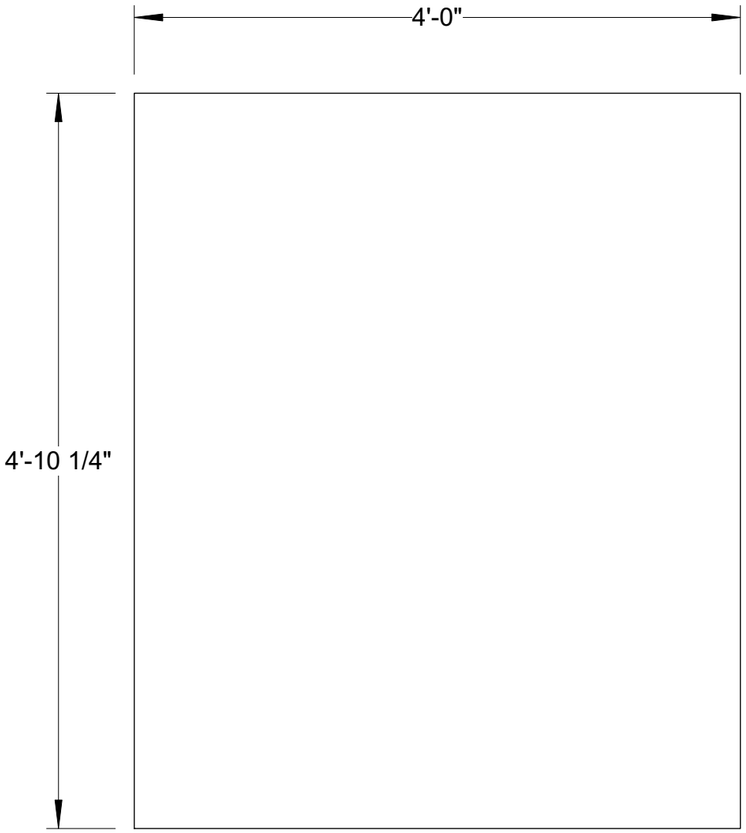

1 CONDUCTOR'S HOLE HATCH - FRONT VIEW
Scale: 1"=1'-0"

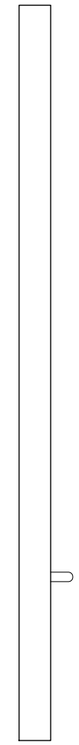

2 SIDE VIEW
Scale: 1"=1'-0"

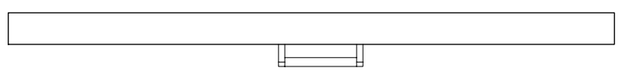

1 CONDUCTOR'S HOLE HATCH - FRONT VIEW
Scale: 1"=1'-0"

NOTES:

- SHIP'S LADDER USED TO CLIMB UP THROUGH CONDUCTOR'S HOLE; LADDER AGAINST DOWNSTAGE SIDE
- HATCH SHOULD FIT TO CONDUCTOR'S HOLE
- HINGE ON UPSTAGE SIDE
- HANDLE PLACEMENT LOCAITON WHERE NECESSSARY
- ONLY USED FOR OPENING ENTRANCE, THEN REMAINS CLOSED FOR SHOW; ACTORS AND DANCERS POTENTIALLY MOVING OVER CLOSED HATCH
- WOOD PLANK FLOOR TREATMENT

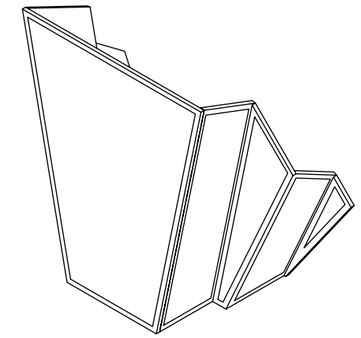

1 FOOTLIGHTS - ISO VIEW
Scale: 2"=1'-0"

NOTES:

- FOUR FOOTLIGHTS
- EXACT LOCATION AND LIGHT TYPE TBD BY LIGHTING DESIGNER
- EXAMPLE BUILD LINK: https://www.props.eric-hart.com/how-to/art-deco-footlights/
- GOLD AND BLACK PAINT TREATMENT

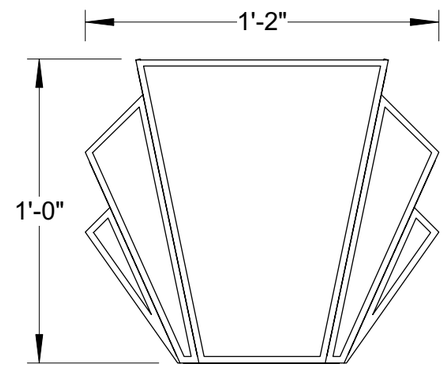

2 FOOTLIGHTS - FRONT VIEW
Scale: 2"=1'-0"

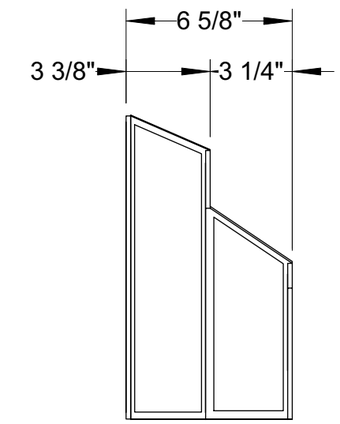

3 FOOTLIGHTS - SIDE VIEW
Scale: 2"=1'-0"

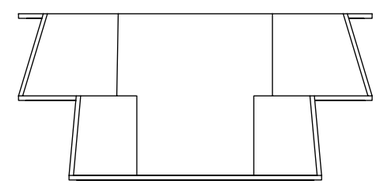

4 FOOTLIGHTS - PLAN VIEW
Scale: 2"=1'-0"

VECTORWORKS EDUCATIONAL VERSION

FILE NAME: CABARET 3D 11-07-21.vwx
DRAWN BY: DESTINY MANEWAL
DATE: 10/08/21
SCENIC DESIGNER: DESTINY MANEWAL
DIRECTOR: SAUNDRA MCCLAIN
SCALE: 1/2" = 1'-0"
PRODUCER: CAL. STATE U., FULLERTON
VENUE: LITTLE THEATRE
TECHNICAL DIRECTOR: JORDAN KIRBY
SHEET TITLE: CONDUCTOR'S HATCH & FOOTLIGHTS
APPROVED BY:
REVISED: 11/8/21
SHEET: 20 OF 27

VECTORWORKS EDUCATIONAL VERSION

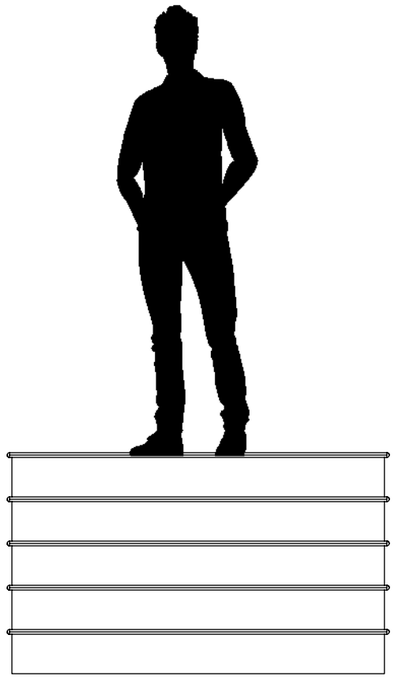

1 HOUSE STAIRS - FRONT VIEW
Scale: 1/2"=1'-0"

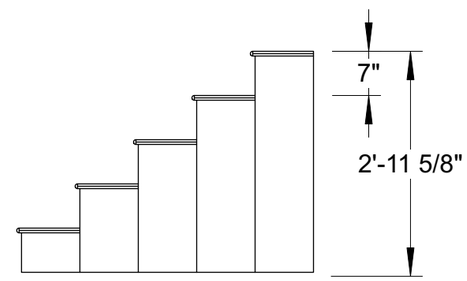

2 HOUSE STAIRS - SIDE VIEW
Scale: 1/2"=1'-0"

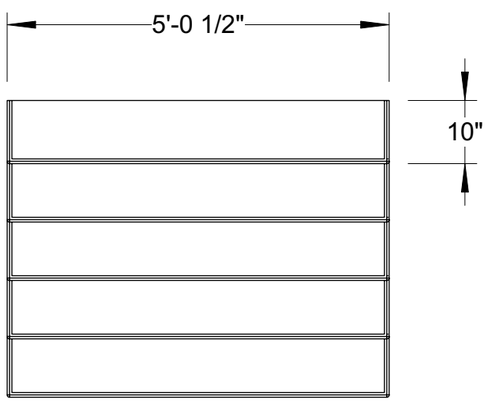

3 HOUSE STAIRS - PLAN VIEW
Scale: 1/2"=1'-0"

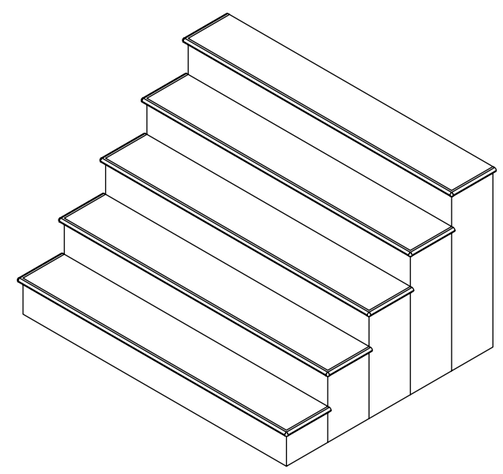

4 HOUSE STAIRS - ISO VIEW
Scale: 1/2"=1'-0"

NOTES:

- THE TWO STOCK HOUSE STAIRS WILL BE USED
- RISE IS 7" AND RUN IS 10"
- STAIRS HAVE 3/4" BULLNOSE
- TYP. BLACK PAINT TREATMENT

VECTORWORKS EDUCATIONAL VERSION

PRODUCER: CAL. STATE U., FULLERTON	SCENIC DESIGNER: DESTINY MANEWAL	FILE NAME: CABARET 3D 11-07-21.vwx
VENUE: LITTLE THEATRE	DIRECTOR: SAUNDRA MCCLAIN	DRAWN BY: DESTINY MANEWAL
TECHNICAL DIRECTOR: JORDAN KIRBY	SCALE: 1/2" = 1'-0"	DATE: 10/08/21

SHEET TITLE: HOUSE STAIRS

APPROVED BY:

REVISED: 11/8/21

SHEET: 21 OF 27

VECTORWORKS EDUCATIONAL VERSION

1 SCRIM - FRONT VIEW
Scale: 1/4"=1'-0"

NOTES:

- EITHER STANDARD BLACK SCRIM, OR DISTRESSED SCRIM; TBD WITH LD
- HUNG ON LINESET 36
- HUNG IN FRONT OF CYC AND CYC GROUNDROW

VECTORWORKS EDUCATIONAL VERSION

PRODUCER: CAL. STATE U., FULLERTON	SCENIC DESIGNER: DESTINY MANEWAL	FILE NAME: CABARET 3D 11-07-21.vwx
VENUE: LITTLE THEATRE	DIRECTOR: SAUNDRA MCCLAIN	DRAWN BY: DESTINY MANEWAL
TECHNICAL DIRECTOR: JORDAN KIRBY	SCALE: 1/2" = 1'-0"	DATE: 10/08/21

SHEET TITLE: SCRIM

APPROVED BY:

REVISED: 11/8/21

SHEET: 22 OF 27

VECTORWORKS EDUCATIONAL VERSION

1 CYCLORAMA - FRONT VIEW
Scale: 1/4"=1'-0"

NOTES:

- HUNG ON LINESET 40
- STANDARD CYC
- GROUNDROW IN FRONT OF CYC, EXACT LOCATION TBD BY LD/ME

VECTORWORKS EDUCATIONAL VERSION

PRODUCER: CAL. STATE U., FULLERTON	SCENIC DESIGNER: DESTINY MANEWAL	FILE NAME: CABARET 3D 11-07-21.vwx
VENUE: LITTLE THEATRE	DIRECTOR: SAUNDRA MCCLAIN	DRAWN BY: DESTINY MANEWAL
TECHNICAL DIRECTOR: JORDAN KIRBY	SCALE: 1/2" = 1'-0"	DATE: 10/08/21

SHEET TITLE: CYCLORAMA

APPROVED BY:

REVISED: 11/8/21

SHEET: 23 OF 27